Progress In Electromagnetics Research, PIER 84, 437–449, 2008

COMPARATIVE DEMODULATION RESULTS FOR SIX-PORT AND CONVENTIONAL 60 GHZ DIRECT CONVERSION RECEIVERS

N. Khaddaj Mallat, E. Moldovan, and S. O. Tatu

INRS-EMT
University of Quebec
800 de la Gauchetiere West, Suite 6900
Montreal, Quebec, H5A1K6, Canada

Abstract—Two 60 GHz homodyne receivers dedicated for high-speed short-range communication systems are presented. The receivers are based on six-port and conventional (anti-parallel diodes) mixers, respectively. Comparative bit error rate results, function of local oscillator power, phase, and frequency shift over the operating bandwidth, are presented and discussed.

1. INTRODUCTION

Radios operating in the license-free 60 GHz band have unique characteristics that make them significantly different than radios operating in the traditional 2.4 and 5 GHz license-free bands. These qualities give to the 60 GHz millimeter wave band radios operational advantages, compared to other wireless systems. In 2001, the Federal Communications Commission (FCC) set aside an unprecedented continuous block of 7 GHz license exempt spectrum between 57 and 64 GHz. This compares to around 660 MHz for all possible 802.11 n channels and an effective 1.5 GHz for Ultra-Wideband (UWB). The 7 GHz unlicensed band around 60 GHz offers opportunities for many communication services requiring high data-rate to move toward millimeter-wave frequencies [1]. In addition to this total available spectrum, 60 GHz enjoys 2.5 GHz of spectrum per channel, also referred to as bandwidth, while UWB has just 520 MHz and 802.11 n has only 40 MHz. Millimeter-wave Wireless Personal Area Networks (WPAN) will be designed to provide short-range, high-speed multimedia data services to terminals in rooms or office space [2]. As known, compared to the circuits at the lower-end of the microwave spectrum,

millimeter-wave circuits have the advantage of miniaturization due to the increased operating frequency. As it is well known, signal wavelength becomes shorter as the frequency increases, so smaller antennas (which are inversely proportional to carrier frequency) can be used at millimeter frequencies to give the required gain overcoming attenuation effects [3]. There are many challenges for the millimeter-wave circuits such as the necessity of low-cost, and high power-efficiency, and of accurate models using computer aided design. Due to the shorter wavelength, a good circuit design must be less influenced by the inherent fabrication errors [4].

Furthermore, oxygen absorption attenuates 60 GHz radio signals that travel over large distances, a property that is unique to the 60 GHz spectrum [5]. This absorption attenuates the 60 GHz signals over distance, so these cannot travel far beyond their intended recipient. The distance limitation also offers interference and security advantages when compared to other wireless links. Another consequence of oxygen absorption is that radiation from one particular 60 GHz radio link is quickly reduced to a level that will not interfere with other 60 GHz links operating in the same vicinity. This reduction enables the ability for 60 GHz devices to successfully operate within one location.

Clearly, we must look upward, but just how far up isn't so obvious. One tempting thought is to use really high frequency-infrared light. Although, that tactic works fine if all you want to do is to switch TV channels with your remote or to operate a wireless mouse. It turns out that it's hard to modulate the output of infrared light-emitting diodes, fast enough for more demanding applications. Consequently, the use of RF frequencies makes more sense, and the best prospects reside in the 7 GHz unlicensed spectrum around 60 GHz. Those frequencies are 10 times higher than anything used today and, with the bandwidth they provide, they can carry a most significant data amount. Until now, engineers designing products for the consumer market have shied away from 60 GHz because of the technical difficulties, but bandwidth hunger has finally awaked their interest. Various millimeter-wave front-end architectures, fabrication technologies, and modulation schemes were proposed in recent years [6, 7].

In this paper, a detailed comparison between two different 60 GHz homodyne receivers based on a six-port demodulator and a conventional mixer with anti-parallel diodes pair (APDP) [8] is performed. Our goal is to identify the optimal architecture to be used in wireless High Definition (HD) communications having a bit error rate (BER) requirement of 10^{-9}. To evaluate BER performance, the Advanced Design System (ADS) software of Agilent Technologies is used.

2. SIX-PORT AND CONVENTIONAL HOMODYNE RECEIVERS

The block diagram of the 60 GHz homodyne receiver based on the six-port circuit with related power detectors and the baseband module is shown in Fig. 1. The six-port is based on four 180° rat-race couplers as presented in [9]. Its layout is shown in Fig. 2. The power detectors (used in both receivers) are based on Schottky diodes with related matching circuits, which are widely used in various millimeter-wave mixer implementations. The baseband module is composed of two differential amplifiers.

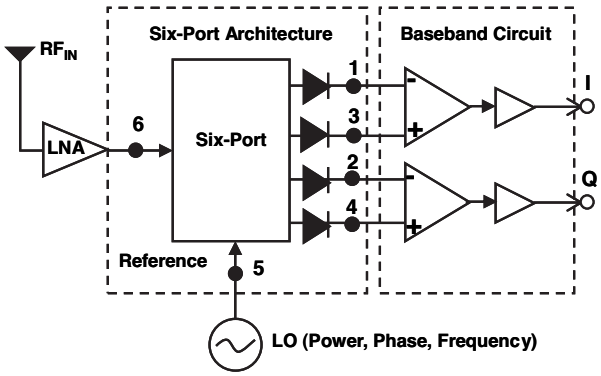

Figure 1. Block diagram of six-port receiver architecture.

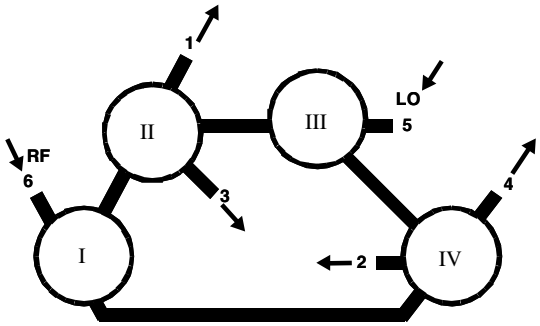

Figure 2. Six-port layout.

The millimeter-wave frequency conversion is performed using a six-port module. Basically, this acts as an additive mixer in which the resulting sum of millimeter-wave signals is nonlinearly processed using millimeter-wave detectors. In [9], the rat-race six-port circuit

is integrated in a heterodyne receiver whose intermediary frequency (IF) is nonzero, and generally, it is selected to be between the RF and the baseband frequencies. At high frequencies, the use of two down conversion stages is often needed, to avoid problems due to LO stability and to obtain a higher gain.

Tatu et al. present in [10] a Ka-Band direct conversion six-port receiver, using a six-port circuit based on hybrid couplers. Homodyne receivers are simpler and less costly than heterodyne ones, by avoiding the IF module composed by amplifiers, filters and the local oscillator, required for final down conversion. Another important advantage of direct conversion is that there is no image frequency, since the mixer difference is effectively zero [11]. One of its most important disadvantage is that the LO must have a very high degree of precision and stability, especially at high RF frequencies, to avoid drifting of the received signal. The synchronism of the local oscillator with the incoming carrier (both frequencies and phases are identical) is fundamental for the demodulation process in a coherent communication receiver [12].

The conventional homodyne receiver is based on anti-parallel diodes, acting as local oscillator driven switches. In last times, different homodyne architectures were proposed. Shimozawa et al. presents in [13] a direct conversion receiver using an even harmonic mixer (EHM) with an anti-parallel diodes pair. The main reason of this architecture is that a sub-harmonic LO, with no bias circuit, can successfully replace an expensive millimeter-wave one; its balanced structure suppresses the first-order mixing products [14, 15]. Itoh et al. proposes in [16] a direct conversion sub-harmonic in-phase/quadrature (I/Q) mixer, at 40 GHz (Ka-band), for broad-band digital baseband modulation and demodulation process. Fig. 3 shows this homodyne architecture implemented at 60 GHz which is consisting of 60 GHz V-band sub-harmonic quadrature mixers (V-band), and 30 GHz LO. Each sub-harmonic mixer is composed of a pair of anti-parallel diodes, open and short matching stubs, a 45° phase delay line, at 30 GHz, and Wilkinson power dividers for the RF and LO signal split. In order to avoid RF and LO leakages, the open and short stubs are optimized to a quarter-wave length at 30 GHz (or a half-wave length at 60 GHz). A phase delay line of 45° at 30 GHz is inserted in one of the LO splitted signal path, in order to obtain an I/Q demodulator. These lines have an important impact on the receiver bandwidth. The proposed mixers are suitable at higher frequencies, when it can be difficult to produce the required LO signal (the low phase noise, tuning range and output power become more difficult to achieve with increasing frequency, while cost increases).

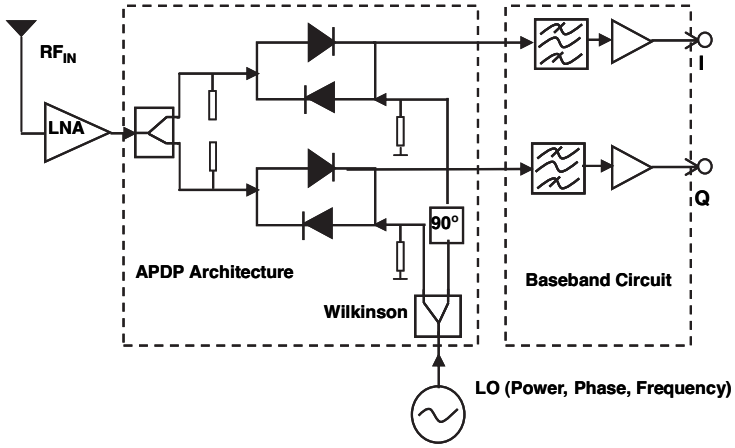

Figure 3. Block diagram of APDP receiver architecture.

A relatively large number of applications using sub-harmonic mixers with anti-parallel diodes for millimeter wave mixers [17], modulators [18], as well as direct conversion mixers [19] have been proposed. A QPSK-modulation (Quadrature Phase Shift Keying) is used in the present work.

First, the required transmitted signal power and the range between the transmitter and the receiver are calculated for a HDTV wireless link, based on the theoretical equations. Therefore, based on the required parameters, already obtained by theoretical means, the simulations are performed and the results are compared in terms of BER performance, depending of LO power level, phase error, and frequency shift over the operating bandwidth.

Following is an example of a required BER evaluation for a HDTV wireless link without any error correction. As known, a TV screen is made up of pixels. A 1080p HDTV has 1080×1920 pixels or a total of 2,073,600 pixels. Each pixel has 24 bits, 8 for each fundamental color: red, green and blue (RGB). The wireless HD specifications require a BER of 10^{-9}, meaning that, out of 1 billion bits transmitted, one bit is in error. The allure is so strong that a special task force is now working on an extension of the IEEE 802.15.3 standard for wireless personal area networks, in the 57–64 GHz band. In 2006, a number of companies (Matsushita, NEC, Sony...) came together to define a specification for transmitting HD video signals in this slice of the radio spectrum. Their group, called Wireless HD, of Sunnyvale, Calif., wants to link TV sets to disc players, video cameras, game consoles, laptops, and other devices at the rates up to 5 Gb/s, fast enough to transmit

an HD feature movie in about a minute [20]. Therefore, the target of this paper is to find the optimal low-cost high data rate homodyne receivers, having a BER of 10^{-9}.

The theoretical curve of BER, function of E_b/N_0 (in the presence of white noise only), is shown in Fig. 4. As known, the E_b value is the average energy of the modulated bit and N_0 represents the spectral density of the noise power (white noise in a bandwidth of 1 Hz).

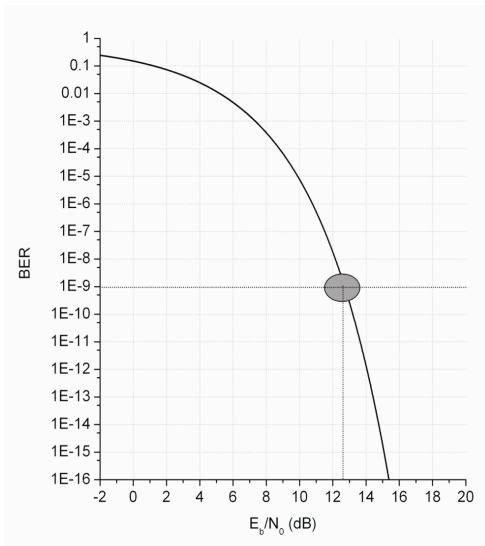

Figure 4. BER theoretical curve for QPSK modulation.

It is noted that, for a BER value of 10^{-9}, the E_b/N_0 ratio should be around 13 dB. Using the following Equation (1), the signal to noise ratio (C/N) for a specific E_b/N_0 value can be calculated. B_W and f_b represent the noise bandwidth, and the bit rate, respectively [21].

$$\left(\frac{C}{N}\right)_{\mathrm{dB}} = \left(\frac{E_b}{N_o}\right)_{\mathrm{dB}} + 10\log\frac{f_b}{B_W} \quad [\mathrm{dB}] \tag{1}$$

The overall BER calculation using the C/N ratio is possible only if the noise bandwidth is very well specified. It is noticeable that the E_b/N_0 ratio is standardized, independent of the noise bandwidth. In QPSK ideal systems, the receiver noise bandwidth is equal to half of the modulated signal bandwidth [21]. According to (1) and the theoretical BER curve presented in Fig. 4, for an f_b of 500 Mb/s and a B_W of 250 MHz, the resulting C/N ratio is 16 dB, corresponding to a BER of 10^{-9}. Considering that the noise figure F of a low-cost receiver is

around 10 dB, the minimum receiver input power P_r for the requested BER value of 10^{-9} can be calculated using the following equation [21]:

$$P_r = K\left[T_A + (F-1)T_0\right] B \left(\frac{C}{N}\right) \tag{2}$$

In the previous equation, $K = 1.38 \times 10^{-23}$ J/K is the Boltzmann's constant, and T is the effective temperature in Kelvin degrees ($T_A = T_0 = 300$ K). The corresponding minimum received power is equal to -64 dBm. The transmitted power P_t is supposed to be equal to 10 dBm, which is well feasible with today's 60 GHz MMIC amplifiers operating in their linear region [2].

According to Friis Equation (3), the free-space attenuation is direct proportional to the square of the frequency and the range.

$$P_r = G_t G_r \frac{c^2}{(4\pi R f)^2} P_t \tag{3}$$

Considering the proposed scenario, free-space attenuation of 88 dB is calculated at 10 m range. If the transmitting and receiving antenna gains, G_t and G_r, are at least 7 dBi, the required input power at the maximum range (corresponding to the BER value of 10^{-9}) can be obtained. Table 1 summarizes these results for a 60 GHz wireless link.

Table 1. Parameters of the proposed 60 GHz wireless link.

f[GHz]	P_t[dBm]	P_r[dBm]	G_t[dB]	G_r[dB]	λ[mm]	R[m]
60	10	-64	7	7	5	10

3. BER DEMODULATION RESULTS

In these experiments, the ADS system simulations are performed using the parameters of Table 1, at an operating frequency of 60 GHz. The simulation block diagram is shown in Fig. 5. It contains QPSK

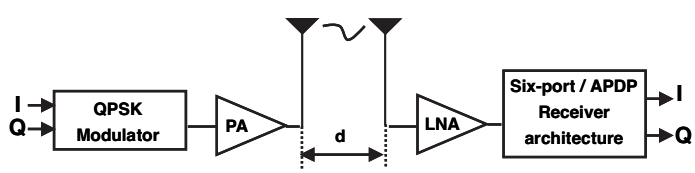

Figure 5. ADS simulation block diagram.

modulator, power amplifier (PA), two antennas, low noise amplifier (LNA) and the receiver. The proposed homodyne receivers, presented in Figs. 1 and 3, are used to perform comparative simulations.

References [8–10], confirm that both six-port and the conventional receiver architectures can be used in millimeter-wave direct conversion receiver. Therefore, their BER performance is discussed in various conditions, by sweeping the LO signal parameters as power, non-synchronism (phase-error), and frequency.

3.1. BER Results VS LO Power Shift

Using the anti-parallel diodes receiver architecture, the BER curve variations related to three different LO power values, +4 dBm, +6 dBm and +8 dBm, are showed in Fig. 6. It can be observed that the BER curve corresponding to a minimum LO power of 8 dB is practically superposed to the theoretical one. If the LO power is decreased (<+8 dBm), the receiver BER performance deteriorates rapidly. Therefore, for the same E_b/N_0 ratio of 13 dB (representing the energy corresponding to BER = 10^{-9} in an ideal demodulator), a huge difference between the BER values corresponding to 6 dBm and 8 dBm of LO power can be observed (BER = 10^{-2} and 10^{-9} respectively). In conclusion, a minimum 8 dBm LO power is required for the anti-parallel diodes receiver architecture.

Figure 7 presents the BER simulation results corresponding to

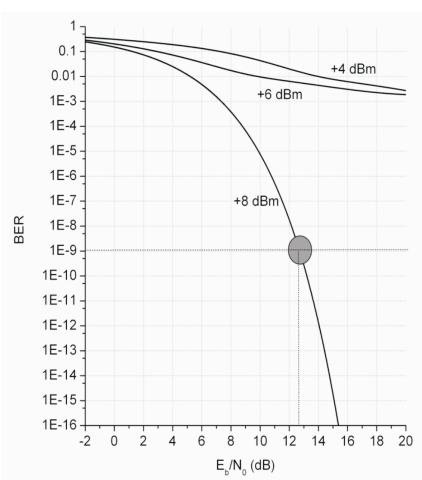

Figure 6. BER versus LO power shift — APDP architecture.

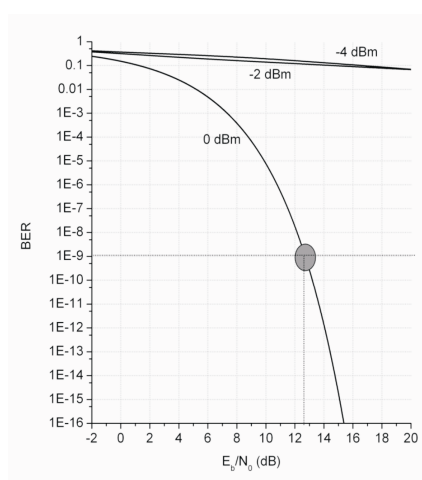

Figure 7. BER versus LO power shift — Six-port architecture.

0 dBm, −2 dBm, and −4 dBm LO power, using the six-port receiver implementation. It can be seen that this receiver has high BER performance for a minimum LO power of 0 dBm. In this case, the BER curve is practically superposed to the theoretical one. This is an important and essential result; it demonstrates that the required minimum LO power of the six-port architecture (0 dBm) is reduced by 8 dBm comparing to the anti-parallel diodes receiver architecture (8 dBm), to fulfill the task of a millimeter-wave receiver. This represents one of the most important differences between the six-port and the anti-parallel diodes receiver implementations. In fact, this huge LO power needed for the anti-parallel diodes receiver is related to the diode operating principal based on ON/OFF status, to perform the frequency down conversion. Therefore, the six-port down conversion appears to be more appropriate for a low-cost implementation of a 60 GHz receiver.

3.2. BER Results VS LO Phase Shift

Another criterion to be evaluated is related to the LO phase error. All previous simulations were done by supposing a perfect synchronism between the local oscillator and the incoming carrier. This paragraph will present and analyze comparative simulation results in the presence of LO phase error, for both receiver implementations. ADS simulations allow the control of the LO phase error by shifting its phase value.

Figure 8 shows the BER variations related to different LO phase error values, considering the same phase range [0°–40°], for the anti-parallel diodes receiver architecture. As seen, a phase error of 20° from synchronism will significantly affect receiver BER performance (from 10^{-9} to 10^{-4} for an E_b/N_0 of 13 dB).

The BER variations in the case of the six-port receiver architecture, considering the same phase error range of 40°, are shown through Fig. 9. The BER curve corresponding to a 20° phase error from synchronism is very close to the theoretical one (almost identical). Even for a phase error of 40°, the BER variations are considered acceptable (BER degrades from 10^{-9} to 10^{-7}, for an E_b/N_0 of 13 dB).

As known, the LO synchronism is fundamental in wireless communications. According to previous results, to obtain high performance, almost perfect synchronization must be obtained in the anti-parallel architecture. Using the six-port receiver implementation, an excellent BER value for an extended LO phase error range, up to 20°, is obtained.

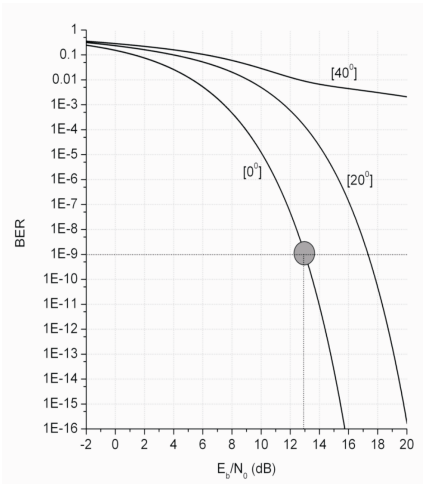

Figure 8. BER versus LO phase error shift — APDP architecture.

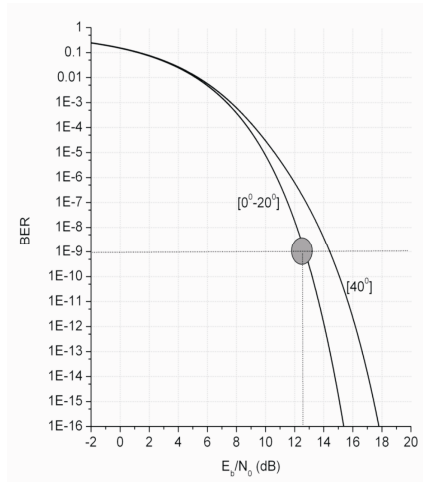

Figure 9. BER versus LO phase error shift — Six-port architecture.

3.3. BER Results VS Operating Frequency

In this paragraph, comparative ADS system simulation results related to BER performance in a frequency band for both receiver implementations are presented. Considering the same simulation parameters, a perfect synchronism and a +8 dBm LO power for the conventional receiver with anti-parallel diodes, it can be observed that the BER performance is very sensitive to the frequency variations around the 60 GHz carrier frequency. The BER may fall below acceptable levels even, for slight frequency variations, if the LO is maintained at a minimum power (+8 dBm). Otherwise, by increasing the LO power to 18 dBm, a bandwidth of 2 GHz can be obtained, as seen in Fig. 10. Therefore, a larger bandwidth can be obtained at the expense of a larger LO power.

In addition, considering the initial LO power of 0 dBm for the six-port direct conversion receiver, good BER performance is obtained through a bandwidth of 100 MHz. Otherwise, by increasing the LO power to 1 dBm, a 2 GHz bandwidth can be also obtained, as shown in Fig. 11.

Therefore, comparable results are obtained for both receivers, if the LO power is increased by 10 dB. Nevertheless, for the same frequency bandwidth, the six-port receiver implementation need 8 dB less LO power, which represents an important advantage compared to anti-parallel diodes architecture. In both cases, the bandwidth

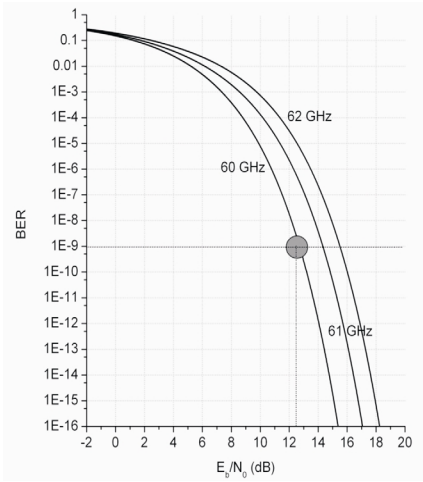

Figure 10. BER versus LO frequency shift — APDP architecture.

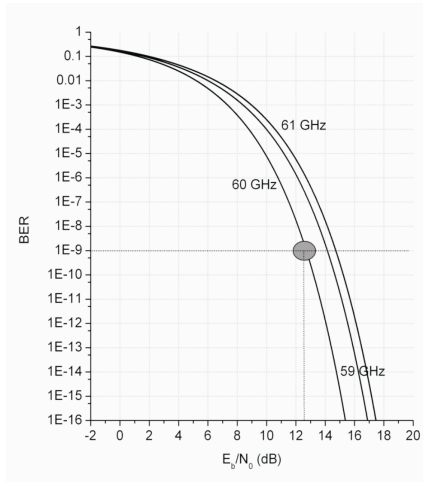

Figure 11. BER versus LO frequency shift — Six-port architecture.

limitation is due to the microstrip lines used for matching circuits and RF/LO isolation. These lines are optimized exactly at 60 GHz. As known, improved matching networks with multiple balanced stubs can increase the receiver bandwidth for both architectures.

4. CONCLUSION

In this paper, we provide a detailed system simulation result comparison of two different receiver architectures, dedicated to millimeter-wave wireless communications, at 60 GHz. The first is based on a six-port module and the other on anti-parallel diodes.

Optimal demodulation results are obtained for both receiver architectures using QPSK modulated signals. Both architectures are compared based on simulated BER performance, by investigating and analyzing the effect of shifting the LO power, the phase error, and the operating frequency. Comparative ADS simulation results demonstrate that the six-port architecture offers superior BER performance in all considered conditions. The six-port receiver architecture is less sensitive to LO power variations and phase errors than the anti-parallel diodes architecture. In addition, by increasing the LO power, a larger bandwidth is obtained for both architectures, but considerably less LO power is needed in the case of six-port implementation.

Based on our results, the six-port architecture enables the design

of high performance, compact, and low-cost wireless millimeter-wave communication receivers for future high-speed wireless communication systems, according to the IEEE 802.15.3c wireless standard.

REFERENCES

1. Fisher, R., "60 GHz WPAN standardization within IEEE 802.15.3c," *2007 International Symposium on Signals, Systems, and Electronics*, IEEE catalog Number 07EX1869C, 103–105, 2007.
2. Smulders, P., "Exploiting the 60 GHz band for local wireless multimedia access: Prospects and future directions," *IEEE Communications Magazine*, Vol. 01, 140–147, 2002.
3. Costanzo, S., I. Venneri, G. Di Massa, and G. Amendola, "Hybrid array antenna for broadband millimeter-wave applications," *Progress In Electromagnetics Research*, PIER 83, 173–183, 2008.
4. Shen, G.-F., X.-M. Zhang, H. Chi, and X.-F. Jin, "Microwave/millimeter-wave generation using multi-wavelength photonic crystal fiber brillouin laser," *Progress In Electromagnetics Research*, PIER 80, 307–320, 2008.
5. Mead, J. B. and R. E. McIntosh, "Millimeter-wave polarimetric radars," *Progress In Electromagnetics Research*, PIER 03, 391–150, 1990.
6. Mizuno, M., C. Otani, K. Kawase, Y. Kurihara, K. Shindo, Y. Ogawa, and H. Matsuki, "Monitoring the frozen state of freezing media by using millimeter waves," *Journal of Electromagnetic Waves and Applications*, Vol. 20, No. 3, 341–349, 2006.
7. Oka, S., H. Togo, N. Kukutsu, and T. Nagatsuma, "Latest trends in millimeter-wave imaging technology," *Progress In Electromagnetics Research Letters*, Vol. 1, 197–204, 2008.
8. Park, J. Y., S. S. Jeon, Y. Wang, and T. Itoh, "Integrated antenna with direct conversion circuitry for broad-band millimeter-wave communications," *IEEE Transactions on Microwave Theory and Techniques*, Vol. 51, 1482–1488, 2003.
9. Khaddaj Mallat, N. and S. O. Tatu, "Six-port receiver in millimeter-wave systems," *2007 IEEE International Conference on Systems, Man, and Cybernetics*, 2693–2697, 2007.
10. Tatu, S. O., E. Moldovan, K. Wu, R. G. Bosisio, and T. A. Denidni, "Ka-band analog front-end for software-defined direct conversion receiver," *IEEE Transactions on Microwave Theory and Techniques*, Vol. 53, 2768–2776, 2005.

11. Pozar, D. M., *Microwave and RF Design of Wireless Systems*, Wiley, New York, NY, 2001.
12. Karsi, M. F. and W. C. Lindsey, "Effects of CW interference on phase-locked-loop performance," *IEEE Transactions on Communications*, Vol. 48, 886–896, 2000.
13. Shimozawa, M., K. Kawakami, K. Itoh, A. Iida, and O. Ishida, "A novel, sub-harmonic pumping direct conversion receiver with high instantaneous dynamic range," *1996 IEEE MTT-S International Microwave Symposium Digest*, Vol. 2, 819–822, 1996.
14. Mass, S. A., *Microwave Mixers*, Artech House, Norwood, MA, 1993.
15. Rohde, U. L. and D. P. Newkirk, *RF/Microwave Circuit Design for Wireless Applications*, Wiley, New York, NY, 2000.
16. Park, J. Y., S. S. Jeon, Y. Wang, and T. Itoh, "Millimeter wave direct quadrature converter integrated with antenna for broadband wireless communications," *Microwave Symposium Digest, 2002 IEEE MTT-S International*, Vol. 2, 1277–1280, 2002.
17. Cohn, M., J. E. Degenford, and B. A. Newman, "Harmonic mixing with an antiparallel diode pair," *IEEE Transactions on Microwave Theory and Techniques*, Vol. 23, 667–673, 1975.
18. Itoh, K., M. Shimozawa, K. Kawakami, A. Lids, and O. Ishida, "Even harmonic quadrature modulator with low vector modulation error and low distortion for microwave digital radio," *IEEE Transactions on Microwave Theory and Techniques*, Vol. 2, 967–970, 1996.
19. Yamaji, T. and H. Tanimoto, "A 2 GHz balanced harmonic mixer for direct-conversion receivers," *IEEE 1997 Custom Integrated Circuits Conference*, 193–196, 1997.
20. Razavi, B., "Gadgets gab at 60 GHz," *IEEE Spectrum*, Vol. 45, 46–49, 2008.
21. Feher, K., *Wireless Digital Communications: Modulation and Spread Spectrum Application*, Prentice-Hall PTR, 1995.