Progress In Electromagnetics Research C, Vol. 10, 201–214, 2009

UNDERSTANDING STANDARD OFDM WIMAX SIGNAL ACCESS IN RADIO OVER FIBER SYSTEM

C.-H. Yeh

Information and Communications Research Laboratories
Industrial Technology Research Institute
Chutung, Hsinchu 31040, Taiwan

C.-W. Chow, C.-H. Wang, F.-Y. Shih, and Y.-F. Wu

Department of Photonics and Institute of Electro-Optical Engineering
National Chiao Tung University
Hsinchu 30010, Taiwan

Y.-L. Liu

Information and Communications Research Laboratories
Industrial Technology Research Institute
Chutung, Hsinchu 31040, Taiwan

S. Chi

Department of Electro-Optical Engineering
Yuan Ze University
Chungli, Taoyuan 32003, Taiwan

Abstract—Radio over Fiber (RoF) system has attracted much industry and research interest to extend the wireless cell coverage and reduce the cost by using the distributed remote antenna units (RAUs). However, the effective transmission fiber length in the RoF systems would be limited due to the time division duplex (TDD) mode used in the practical WiMAX access. Here, we study the transmission limitations and performances of the standard WiMAX signal for RoF systems. The throughputs and packet-losses at different fiber lengths are also investigated and analyzed. Besides, in order to increase the emitting power of the RAUs, a robust TDD switching mechanism is proposed in each RAU for RoF system.

Corresponding author: C.-H. Yeh (depew@itri.org.tw).

1. INTRODUCTION

Due to the ever-increasing demand of wireless communication and mobility, various wireless communication systems have been developed and deployed. Worldwide Interoperability for Microwave Access (WiMAX) system [1, 2] is now closely examined by many companies for the last mile wireless connectivity to provide flexible broadband services to end users. The technology is based on the IEEE 802.16 and 802.16e standards. According to the WiMAX standard, the cell coverage can typically extend to 5 km in the air, with higher data rate and more selectable channel bandwidth than 3G system. Radio-over-fiber (RoF) nowadays is a hot topic for integrating optical technologies with wireless systems. RoF deploys optical fiber, which has low loss and high bandwidth, to distribute radio frequency (RF) signals from central station (CS) or base station (BS) to remote antenna units (RAUs). For some applications, such as inside a long tunnel with many bends, the deployment of the wireless WiMAX is greatly hindered. Because of this, using RoF to carry the WiMAX signal is a good solution. The RoF technology can also provide the advantages of using small size, cost-effective RAU, which can increase the scalability of the network [3, 4].

Using time-division-duplex (TDD) is favored by a majority of implementations in wireless systems because of its advantages of providing flexibility in choosing uplink (UL)-to-downlink (DL) data rate ratios and having less complex transceiver design. However, it is worth to mention that the TDD system limits the transmission distance of systems. The past studies of TDD operation in RoF systems have been reported in RoF link [5, 6]. Moreover, compared with the past related report [5, 6], they did not study and analyze the fiber transmission limitation of WiMAX RoF in TDD mode and discuss the RF TDD switch in each ONU. The TDD WiMAX system would mitigate the limited WiMAX-over-fiber distance, FDD or OFDMA can be used [7]. Here, we apply the standard WiMAX signal generated from a commercial base station (BS) to the RoF system. For the first time, to our knowledge, the performance characterization and limitation are analyzed, showing that the maximum effective transmission length of the WiMAX RoF system is mainly limited by the synchronization in the TDD mode and not by the signal-to-noise ratio (SNR). Moreover, WiMAX RoF performances of packet-loss at different link lengths are investigated and analyzed.

TDD switch (SW) architecture is needed at the RAU in the WiMAX RoF link for switching between the UL and DL signals. Furthermore, based on the previous architecture of the TDD switch [7–

11], they were not good enough to withstand high input power emitted from the BS and required adjusting the gap time of medium access control (MAC) layer to achieve TDD signal switching. In order to emit higher power for the RAU, leakage power from the DL may cause damage to the electronic components, such as RF amplifier, in the UL. In this paper, a robust TDD switch architecture with self-detected switching in each RAUs will also be proposed for the WiMAX RoF system. Although, there are many articles for the wireless WiMAX systems, none of them applies the commercial standard WiMAX system in RoF link. Comparing with [5], we included the throughput and packet-loss against different fiber lengths in both uplink and downlink traffics. We believe that the manuscript contains useful information.

2. WIMAX SCENARIO

Figure 1(a) shows the current WiMAX signal access network. In this system, each BS will provide certain cell coverage for the network. Besides, several BSs are connected to the access service network gateway (ASN-GW) for data communication and synchronization. However, the large numbers of BSs would increase the cost for WiMAX system. Because of this, a BS can use RoF link to extend radio-frequency (RF) signal connection and distribution to simplify the network architecture and reduce the cost [12–14]. Optical fiber is an excellent medium for RF signal transmission due to its high bandwidth (BW), low loss, light weight, small cross section and low cost. In this RoF link, a head-end (HE), which consists of an optical-to-electrical (O/E) and an electrical-to-optical (E/O) modules, is used to connect to the BS. A remote antenna unit (RAU) will be used in each picocell. Therefore, the WiMAX RoF system can employ a head-end (HE) and several RAUs to extend the cell coverage and reduce the cost and handover, as illustrated in Fig. 1(b).

In order to realize the WiMAX RoF system, an experiment is performed. Here, Fig. 2(a) shows the proposed WiMAX RoF link connecting a HE and a RAU. The HE and RAU consist of a pair of E/O and O/E converters for conversing electrical and optical signals. To characterize and analyze solely the performance of the WiMAX RoF system and to remove the atmosphere multipath fading effects of the signal, the antenna (ANT) in the RAU and mobile station (MS) are purposely removed. For the reported WiMAX-over-fiber system in the manuscript, the conventional antenna connecting to the base station via the electrical RF cable has been replaced by a pair of O/E-E/O converter and optical fiber. The detection of multipath

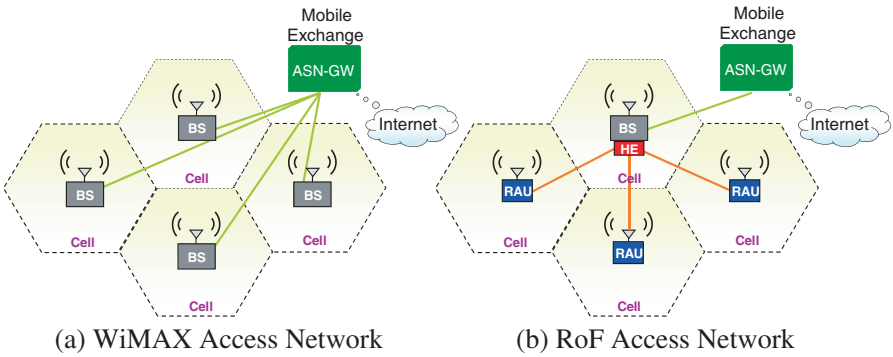

(a) WiMAX Access Network (b) RoF Access Network

Figure 1. (a) Current WiMAX access network. (b) WiMAX access network by using RoF link.

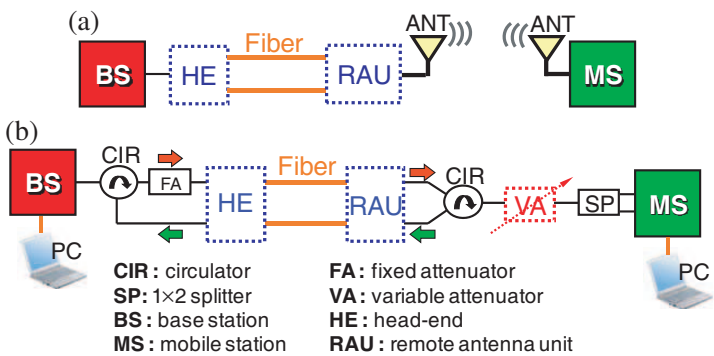

Figure 2. (a) Typical WiMAX RoF system. (b) The experimental setup of the proposed WiMAX RoF link architecture for characterization.

fading signals in the conventional wireless antenna is the same as that by using the RAU. Since multipath fading issue has been considered in standard wireless WiMAX system, we believe that the multipath fading issue is not the main interest in this manuscript. And this is the reason that we try to simplify the setup by focusing on the performance analysis owing to the optical fiber solely. Hence, the RAU and MS are directly connected using high frequency electrical cables via a RF circulator (CIR), RF variable attenuator (VA) and a RF splitter (SP). Fig. 2(b) presents the experimental setup of the proposed WiMAX RoF system. In the experiment, we used a standard WiMAX BS and MS, (products of *ZyXEL Ltd.*, Taiwan), which are designed and optimized for wireless WiMAX access communications.

For the RoF connection, the HE and RAU are two pairs of OE and EO transceivers (TRxs), which are commercial products (*PPM Ltd*). For the OE and EO transceivers used, the maximum input RF power was 10 dBm. In this analysis, the WiMAX RoF link between BS and MS was connected by using the transmission control protocol (TCP) and user flow protocol (UDP) for the throughput and packet loss measurements. The standard WiMAX signal with 14.5 dBm output power produced by the BS was set at the center frequency of 2.545 GHz. The WiMAX was 16-quadrature amplitude modulation (QAM) orthogonal frequency division multiplexed (OFDM) signal with 3/4 code rate. Thus, Figs. 3(a) and 3(b) show the measured output constellation diagram and frequency spectrum of WiMAX signal before injecting into HE [measured in setup of Fig. 2(b)]. Moreover, in this measurement, the bandwidths of DL and UL traffic were $\sim$ 10 Mb/s and $\sim$ 3.8 Mb/s respectively, communicating in TDD mode.

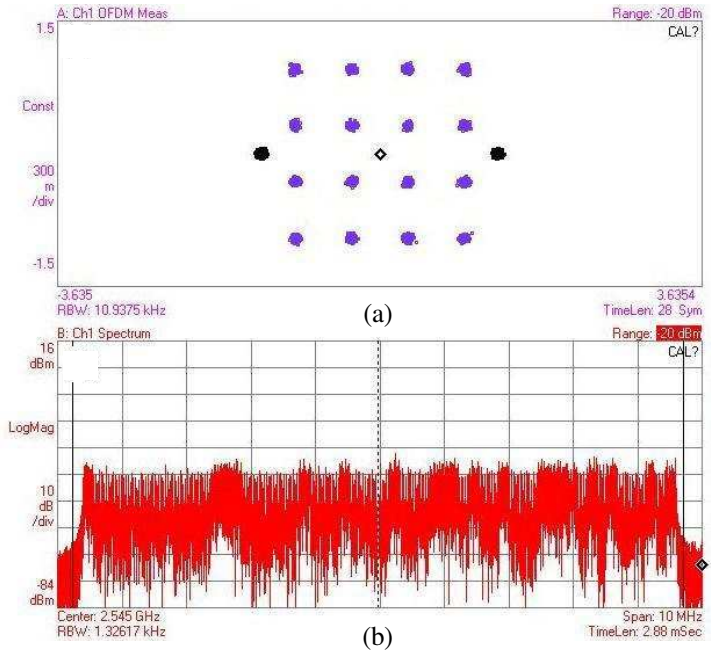

Figure 3. (a) Output constellation diagram and (b) frequency spectrum of WiMAX signal before injecting into HE.

3. EXPERIMENT, RESULT AND DISCUSSION

In the experiment, the DL electrical WiMAX signal with the output power of 14.5 dBm was emitted from the BS. The signal then passed through a circulator, a 20 dB fixed attenuator (FA) to the HE transmitter (Tx) for E/O or O/E conversion. And about −6.4 dBm of electrical power was launched into the HE, as shown in Fig. 2(b). After the EO conversion at the HE, optical signal was propagating through standard single mode fiber (SMF) at different lengths, and then launched into the RAU for OE conversion. Then the converted electrical DL signal transmitted via the CIR, VA and the SP to the MS. Both the BS and MS were connected to computers for signal analysis. For the UL, signal of 6.2 dBm output power was emitted from the MS and transmitted through the same optical and electrical link back to the BS. The VA in the experiment was used to simulate the atmospheric loss systematically for link between the BS and MS. In this paper, we are interested in evaluating the standard WiMAX signal performance over optical fiber. Hence, we would like to remove other variables in the studies, such as antenna effect, multipath fading, etc. We also believe that for a point-to-point direct wireless link between the RAU and MS, the main limiting factor is the air attenuation, which is regarded to be constant at a particular frequency band [16]. Hence, we believe that using RF attenuator is possible to emulate the point-to-point air attenuation. Moreover, in the HE and RAU modules, two single longitudinal mode (SLM) optical signals with output powers of 3.6 and 3.7 dBm at the wavelength 1312.64 and 1312.76 nm [measured in setup of Fig. 2(b)] are used as the UL and DL signals in RoF link, respectively. In the measurement, the frame length of WiMAX signal was 5 ms. And the relative power differences between overhead and payload data was about $2 \sim 3$ dB. The E/O converter is a high performance analogue data transmission system, which provides great benefits to users who require a solution to electrical interference and signal attenuation problems in signal monitoring and distribution. It can operate between 10 MHz and 3 GHz. And the optical output power and rise time of E/O converter are around 3.6 dBm and < 200 ps. Besides, the optical modulation depth of E/O converter was ~ 0.8. In this study, we used two fibers with equal length to propagate the DL and UL signals respectively, which is to reduce the signal crosstalk since the Txs in the HE and RAU are emitting optical signal at similar wavelength, and there is no optical filter before the Rxs in the HE and RAU. The emitted optical signal is about 3.6–3.7 dBm, and we believe that the fiber nonlinearities can be negligible. Since the fiber lengths are carefully measured by OTDR, we believe that the results are still

good enough. In this study, we use Corning SMF-28 optical fiber. The attenuation SMF-28 are less than 0.22 dB at 1550 nm and 0.35 dB at 1310 nm. The PMD is 0.1 [ps/(km)$^{1/2}$].

According to WiMAX standard [1], for the TDD-based operation, there are two time gaps of transmit/receive transition gap (TTG) and receive/transmit transition gap (RTG) between DL-and-UL and UL-and-DL, respectively, as shown in Fig. 4. The maximum time gaps of TTG and RTG are 105 and 60 µs, respectively, in standard WiMAX system. Initially, the WiMAX signal access was for UL traffic. After ending gap time of RTG, the BS begins to transmit the DL signal. The signal switching can be achieved by using 1×2 RF switch (SW) in BS and control by MAC within the gap time of RTG, as shown in Fig. 5(a). However, when using the WiMAX access in RoF link, as seen in Fig. 5(b), the TDD switch design of the distributed RAU must complete the DL/UL signal switching within the gap times of TTG and RTG. Besides, the maximum WiMAX output power emitted from BS was 35 dBm. Thus, the higher launched power to the ANT at RAU is desirable in order to increase the emitted RF signal power in WiMAX RoF system. Furthermore, due to the intrinsic power isolation of RF circulator, the leakage power from the DL may cause damage to the UL components, such as the low noise amplifier (LNA). Thus, the RF switch design in RAU must take into account the TDD signal operating

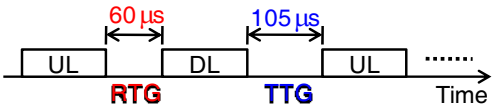

Figure 4. Time diagram of TDD-based WiMAX signal for UL/DL access.

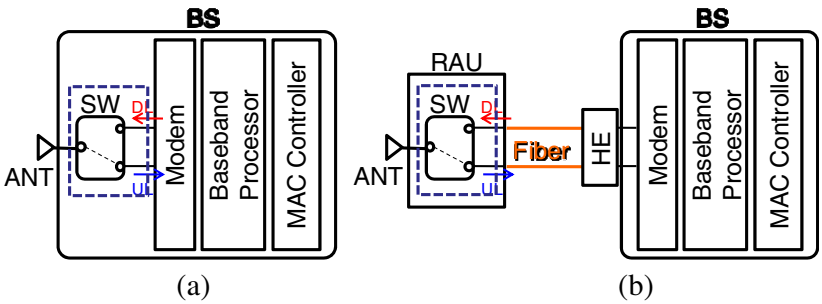

Figure 5. (a) WiMAX TDD switching for DL and UL traffic of BS. (b) TDD switching of RAU in WiMAX RoF architecture.

and high leakage power. Hence, to overcome the TDD transmission in RoF link, a TDD switch design in RAU was also proposed and studied [5]. Ref. [5] proposed a TDD SW in RAU for signal switching by adjusting the gap times of TTG and RTG in MAC to overcome the times of fiber delay and signal processing. The total isolation of its TDD switch was only 40 dB. It is difficult to isolate the leakage power of DL and decrease the total data rate.

Figure 6 shows the proposed TDD switch in the RAU, which is used to solve the limited power isolation issue of typical high-speed RF device and the TDD operating (used in the experiment). Hence, higher RF power can be launched into the ANT in order to enhance the SNR, while preventing the leakage power may cause damage to the electrical components. The proposed RAU consists of a 1×2 switch (SW_1), a 1×1 switch (SW_2), a power amplifier (PA), a low noise amplifier (LNA), a delay element (DE), a detector (DT), a control circuit (CC), and a pair transceiver (E/O and O/E converter), as shown in Fig. 6. Based on the WiMAX standard [1], the maximum WiMAX power can be amplified to 35 dBm. To avoid the leakage power of DL signal into the LNA in the UL, two switches: SW_1 and SW_2 are used to block the leaked DL power. In addition, the proposed TDD switch also needs to consider the signal transmission completely under the gap times of TTG and RTG in fiber link. Initially, the SW_1 connects the UL signal, and the SW_2 turns on for UL traffic. After ending the gap time of RTG, the DL signal from BS is converted by HE and transmits through fiber to the RAU. When the DL signal enters the RAU, the RF signal would pass through the DT and DE. When the DT detects a signal, the CC will switch the SW_1 to the DL traffic side and turn off SW_2 at the same time. The DE is used to provide delay for DL signal, so that there is enough time for the two switches to finish the switching. Thus, the signal delay time (T_{DE}) of DE must be longer than the detecting

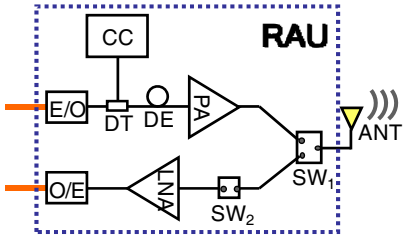

Figure 6. The proposed RAU scheme. SW_1: 1×2 switch; SW_2: 1×1 switch; PA: power amplifier; LNA: low noise amplifier; DE: delay element; DT: detector; CC: control circuit; ANT: antenna.

time (T_{DT}) of DT plus the switching time (T_{SW}) of SW_1 and SW_2. When no DL signal is detected by the CC, the SW_1 and SW_2 must wait a short time (T_{WAIT}) for switching to the UL direction in order to allow the DL signal to be emitted by ANT completely. And, the T_{WAIT} must be longer than that of T_{DE}. For example, the SW_1 with ~ 25 dB isolation can be used at 35 dBm RF input power. Thus, nearly 10 dBm leakage power would leak into SW_2. Thus, compared with [5], our proposed TDD switch of RAU does not adjust the gap times of TTG and RTG in WiMAX BS. The proposed TDD switch can process the signal switching by itself. In this design, the SW_2 has ~ 40 dB isolation to isolate the leakage power to protect LNA. The insertion losses of the two SWs are < 0.6 dB. In the proposed TDD switch design, the maximum gains of PA and LNA are 46 and 15 dB. The switching times of two SWs used are nearly 1 µs. 1. To switch the two SWs within T_{DE} simultaneously, we need two RF delay lines to construct the DE in the RAU to delay the RF DL signal. Thus, the T_{DE} of delay element is < 2 µs. As a result, we do not need to change the gap times of TTG and RTG in BS for TDD-based WiMAX RoF system. Moreover, the proposed TDD SW design with self-detection not only avoids the higher leakage power, but also can synchronize the DL and UL data traffic. 2. For IEEE 802.16e WiMAX, the maximum time gaps of TTG and RTG are 105 and 60 µs, respectively. The TTG frame is 105 µs, which equates to approximately 9 km roundtrip over standard single mode fiber (SMF). This is the theoretical maximum transmission distance for the WiMAX RoF governed by the WiMAX protocol for waiting the acknowledgement signal. The maximum fiber length may be reduced when the switching or electrical to optical conversion delays are included.

In order to characterize the WiMAX signal transmission length, total throughput and packet loss in RoF system, against various fiber lengths are used in the setup in Fig. 2(b). The VA of Fig. 2(b) is used to simulate the air loss of RF signal. Thus, Figs. 7(a) and 7(b) show the DL and UL throughputs at 9.75 ± 0.05 and 3.75 ± 0.05 Mb/s when the powers from the BS and MS are -6.4 and 6.2 dBm, respectively. It also shows the effective dynamic range for DL and UL traffic in different fiber lengths. Figs. 7(a) and 7(b) present the dynamic ranges for DL and UL signals at 22, 16, 19 and 13 dB, and 21, 16, 19 and 14 dB, respectively, in the cases of back to back (B2B), 1 km, 4 km, and 8 km fiber lengths. Besides, we also measure the packet loss for DL and UL traffic in each case, as shown in Figs. 8(a) and 8(b). For the measured results, the packet loss and carrier intensity to noise ratio (CINR) must be smaller than 10% and larger than 24 dB, respectively, to maintain the effective throughput for data traffic. Therefore, in Figs. 8(a)

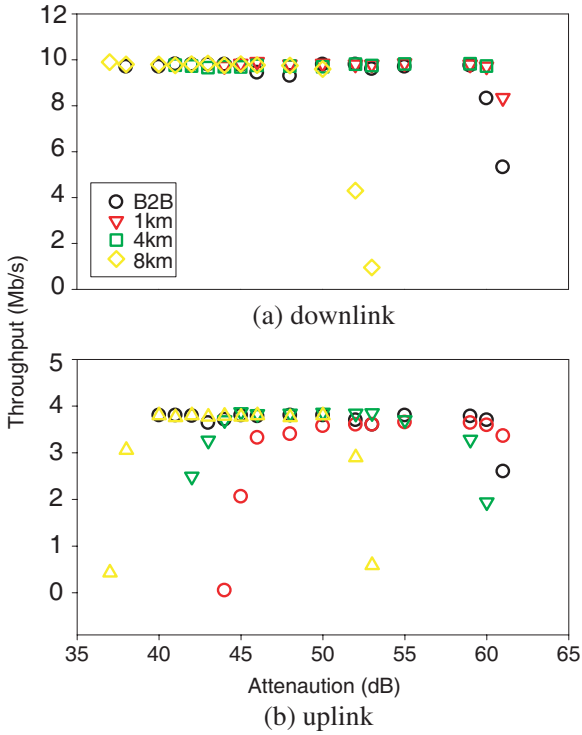

Figure 7. Experimental measurements of throughputs under the different fiber lengths in (a) DL and (b) UL traffics at BTB, 1, 4, and 8 km, respectively.

and 8(b), When 9 km of SMF were used in the DL and UL links, no signal can be detected due to the TDD limitation as described above. The maximum fiber length (9 km theatrically) may be reduced when the switching or electrical to optical conversion delays are included. We have measured and shown in Fig. 7 and Fig. 8 that the high packet loss starts to appear when the fiber length is 8 km. When using 9 km of standard SMF, the whole system cannot be synchronized, thus, we cannot have the measurement results at 9 km SMF. Besides, while the fiber lengths change to 8 km, the DL and UL throughputs can be maintained at 9.75 and 3.75 Mb/s, respectively. For the WiMAX ROF link, the data traffic must be finished within the gap time, including the signal processing, converting and transmitting times. Fig. 7(a) shows the experimental results of throughputs under different fiber lengths in downlink (DL). At 8 km SMF transmission, the DL throughput starts to decrease when the attenuation between the BS and MS is ~ 50 dB.

Fig. 7(b) shows the experimental results of throughputs under different fiber lengths in uplink (UL). We can observe from Fig. 7(b) that the throughput decreases when the attenuation is small (high input RF power launching into the BS). By using the commercial BS and MS, the emitted RF power by the MS is automatically controlled by the BS. The automatic power control in the MS is to extend the life of battery in the MS. In the experiment, when the attenuation between the BS and MS is decreased, the BS detects a higher power from the MS. Then it will order the MS to reduce the emitted RF power. Because of this, the throughput decreases when the attenuation decreases. Figs. 8(a) and (b) show the experimental results of packet loss under different fiber lengths in DL and UL traffics respectively. We can also observe similar trends in Figs. 7(a) and (b).

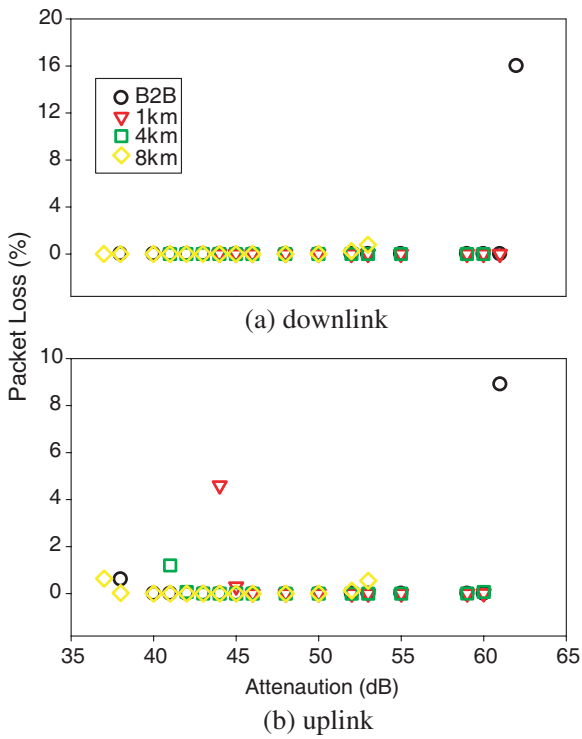

Figure 8. Experimental measurements of packet loss under the different fiber lengths in (a) DL and (b) UL traffics at BTB, 1, 4, and 8 km, respectively.

For 802.16e, the maximum delay spread for multipath interference

allowed is 300 ns. Assuming the separation between two RAUs is 1 km, thus, the separation between RAU_1 and RAU_2 equates to approximately 5000 ns, far more than the allowable delay spread for multi-path interference. If the received powers from RAU_1 and RAU_2 are equivalent, the link tolerance for inter-symbol interference (ISI) is exceeded and the connection is broken. The management of the ISI is the key design consideration for maximum performance for the WiMAX RoF. While the distance and time spent in the critical overlapping region between two adjacent RAUs is minimized; the effect of ISI in a RoF system will be negligible; the reliable WiMAX RoF link can be maintained. This can be managed by antenna selection and placement. Moreover, since the highest frequency component of the WiMAX signal will be not more than 3 GHz, then bandwidth of the optical DSB signal will be not more than 6 GHz, which is about 0.0344 nm at 1312 nm wavelength. Since the signal is transmitting at the dispersion zero wavelength of the fiber, by using zero dispersion slope equation of the SMF-28 fiber, the dispersion parameter is 0.0032 ps/nm/km at 1312 nm wavelength. Hence, the overall dispersion introduced by the 8 km fiber for the DSB signal is about 0.0008 ps, and dispersion is also negligible.

The above results illustrate that the maximum RoF link is not more than 9 km SMF transmission based on the present WiMAX standard. This implies that if the total length of the WiMAX RoF is 8 km, the distance between the MS and RAU should be very close. Otherwise, synchronization cannot be achieved between the BS and MS due to the TDD mode access. In WiMAX RoF system, the fiber transmission would induce a 40 μs delay in an 8 km fiber length by one way. Besides, the signal conversion and TDD switching in HE and RAU modules also need processing time to transmit RF signal. Thus, as mentioned before, the WiMAX RoF system could result in the fiber transmission distance in 8 km long. This also implies that there is a trade-off in distances between the RAU-BS (fiber) and RAU-MS (air). As the target of WiMAX is to provide wireless connections between ANT and MS within the 5 km cell coverage, the present WiMAX protocol developed for wireless connection can have limitation when applied to the WiMAX RoF system. Because of this, TDD framing protocol should be modified, or frequency division duplex (FDD) should be used in order to make full use of the benefits offered by RoF and WiMAX systems.

4. CONCLUSION

In summary, we studied the performances and limitations of standard WiMAX signal optimized for wireless communication to the commercial RoF system for the first time. Results show that the effective RoF transmission fiber length is limited to 8 km SMF transmission due to the TDD framing in the connection using standard WiMAX signal. The experimental results imply that if the total length of the WiMAX RoF is 8 km, the distance between the MS and RAU should be very close. WiMAX RoF performances of throughputs and packet-losses at different link lengths are investigated and analyzed. In addition, a robust TDD switch architecture used in each RAU is proposed for the WiMAX RoF system.

REFERENCES

1. IEEE Std 802.16e/D12, Draft IEEE Standard for Local and metropolitan area networks, Part 16: Air Interface for Fixed and Mobile Broadband Wireless Access Systems.
2. Alemany, R., J. Perez, R. Llorente, V. Polo, and J. Marti, "Coexistence of WiMAX 802.16d and MB-OFDM UWB in radio over multi-mode fiber indoor systems," *MWP/APMP'08*, 74–77, 2008.
3. Usami, M., "Strategy for KDDI's next generation network," *ICTON'08*, Vol. 2, 182–189, 2008.
4. Seeds, A. J., "Radio over fiber systems," *LEOS'08*, 848–849, 2008.
5. Kim, H., J. H. Cho, S. Kim, K. U. Song, H. Lee, J. Lee, B. Kim, Y. Oh, J. Lee, and S. Hwang, "Radio-over-fiber system for TDD-based OFDMA wireless communication systems," *J. Lightw. Technol.*, Vol. 25, 3419–3427, 2007.
6. Kalantari-Sabet, B., M. Mjeku, N. J. Gomes, and J. E. Mitchell, "Performance impairments in single-mode radio-over-fiber systems due to MAC constraints," *J. Lightw. Technol.*, Vol. 26, 2540–2548, 2008.
7. Presi, M., K. Prince, A. Chiuchiarelli, I. Cerutti, G. Contestabile, I. Tafur Monroy, and E. Ciaramella, "Adaptive system for OFDMA WiMAX radio-over-fiber links using a directly modulated R-SOA and optical filtering," *OFC, Paper JWA74*, 2009.
8. Mitchell, J. E., "Performance of OFDM at 5.8 GHz using radio over fiber link," *Electron. Lett.*, Vol. 40, 1353–1354, 2008.
9. Pereira, J. P. R., "A cost model for broadband access networks:

FTTx versus WiMAX," *2nd International Conference on Access Networks and Workshops*, 1–8, 2007.

10. Dutta, G. and D. Das, "Performance study of an optical backbone MAC interconnecting WiMAX base stations over a city/county area," *WOCC*, 1–6, 2008.
11. Nishimori, K., K. Cho, Y. Takatori, and T. Hori, "Automatic calibration method using transmitting signals of an adaptive array for TDD systems," *IEEE Trans. Veh. Technol.*, Vol. 50, 1636–1640, 2001.
12. Cooper, W., J. R. Zeidler, and R. R. Bitmead, "Modeling dynamic channel-allocation algorithms in multi-BS TDD wireless networks with internet-based traffic," *IEEE Trans. Veh. Technol.*, Vol. 53, 783–804, 2004.
13. Yu, J., Z. Jia, T. Wang, and G. K. Chang, "A novel radio-over-fiber configuration using optical phase modulator to generate an optical mm-wave and centralized lightwave for uplink connection," *IEEE Photon. Technol. Lett.*, Vol. 19, 140–142, 2007.
14. Jia, Z., J. Yu, G. Ellinas, and G. K. Chang, "Key enabling technologies for optical-wireless networks: Optical millimeter-wave generation, wavelength reuse, and architecture," *J. Lightw. Technol.*, Vol. 25, 3452–3471, 2007.
15. Chang, G. K., J. Yu, and Z. Jia, "Novel optical-wireless access network architecture for simultaneously providing broadband wireless and wired services," *OFC*, OFM1, 2006.
16. Seybold, J. S., *Introduction to RF Propagation*, John Wiley & Sons, Inc., 2005.