Progress In Electromagnetics Research, Vol. 127, 297–318, 2012

TRANSPOSE RETURN RELATION METHOD FOR DESIGNING LOW NOISE OSCILLATORS

J. L. Jimenéz-Martín[1], V. González-Posadas[1], Á. Parra-Cerrada[1,*], Á. Blanco-del-Campo[1], and D. Segovia-Vargas[2]

[1]DIAC. Universidad Politécnica de Madrid, Ctra Valencia km 7, Madrid 28031, Spain

[2]Grupo Radio, Universidad Carlos III de Madrid, Avda. Universidad 30, Leganés, Madrid 28911, Spain

Abstract—In this paper, a new linear method for optimizing compact low noise oscillators for RF/MW applications will be presented. The first part of this paper makes an overview of Leeson's model. It is pointed out, and it is demonstrates that the phase noise is always the same inside the oscillator loop. It is presented a general phase noise optimization method for reference plane oscillators. The new method uses Transpose Return Relations (RR_T) as true loop gain functions for obtaining the optimum values of the elements of the oscillator, whatever scheme it has. With this method, oscillator topologies that have been designed and optimized using negative resistance, negative conductance or reflection coefficient methods, until now, can be studied like a loop gain method. Subsequently, the main disadvantage of Leeson's model is overcome, and now it is not only valid for loop gain methods, but it is valid for any oscillator topology. The last section of this paper lists the steps to be performed to use this method for proper noise optimization during the linear design process and before the final non-linear optimization. The power of the proposed RR_T method is shown with its use for optimizing a common oscillator, which is later simulated using Harmonic Balance (HB) and manufactured. Then, the comparison of the linear, HB and measurements of the phase noise are compared.

Received 23 February 2012, Accepted 2 April 2012, Scheduled 16 April 2012

* Corresponding author: Ángel Parra-Cerrada (angelpa@diac.upm.es).

1. INTRODUCTION

Oscillators play a key role in every Radar, RF or microwave systems [1–4]. The noise characterization of oscillators is essential for the system engineers, because the device final performance is inherently defined by it [5–7]. At the same time, oscillator design presents high difficulties [8–10], although works by Randall and Hock [11] and Jackson [12], or even later works as González-Posadas et al. and Jiménez-Martín et al. [13, 14] have tried to shed light on the conditions for proper oscillator design. These three last works have tried to unify all linear design methods by giving a global perspective, and they have characterized all oscillators as a feedback system using the Return Relations (RR) [15] and the Normalized Determinant Function (NDF) [16]. In fact, to optimize the oscillator noise has been a great problem because its linear optimization was difficult, or even impossible, for non-feedback oscillators. A first attempt to solve this problem was developed by Leeson in 1966 [17], which was improved and completed by many other authors [18–20]. This way, the very first general noise model was developed using a feedback scheme as it is shown in Fig. 1.

The used block diagram consists of an amplifier and a feedback network. The amplifier is characterized by a gain function, "$G(A, \omega)$", which depends on input amplitude (A) and frequency (ω), and the frequency feedback network is characterized by its frequency response "$H(\omega)$". The feedback network consists mainly of the resonator/filtering, modelled by a serial or parallel circuit with losses (B). This resonant circuit provides a frequency response as it is shown in Eq. (1), where f_0 is the oscillator carrier frequency (in Hz); Δf_m is the carrier offset frequency (in Hz) and Q_L the loaded Q of the resonator (dimensionless).

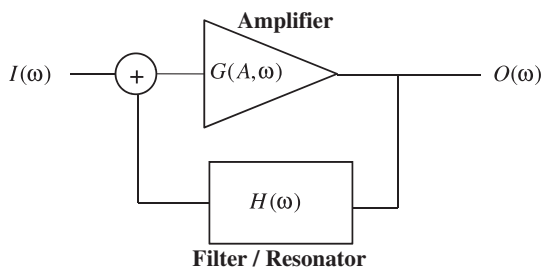

Figure 1. Leeson Oscillator Model employed for determining its phase noise.

$$H(\Delta f_m) = \frac{B}{1 + j \cdot \dfrac{2 \cdot Q_L \cdot \Delta f_m}{f_0}} \tag{1}$$

Using Eq. (1), Leeson's oscillator phase noise model can be rewritten as Eq. (2), where $L_{\text{out}}(\Delta_{fm})$ is the phase noise spectral density ($\text{rad}^2 \cdot \text{Hz}^{-1}$) defined as the ratio between the power density in one phase modulated sideband and the power at the oscillator carrier frequency (if logarithmic units are used it is given in dBc/Hz); P_{in} is the carrier power level (in W) measured at the input of the amplifier loop; F is the noise factor of the amplifier loop, although, as it is explained later, it also takes into account flicker noise up conversion around carrier frequency and gain compression of the amplifier; K is Boltzmann's constant; T is the absolute temperature (Kelvin degrees); and f_c is the flicker cut-off frequency (in Hz).

$$L_{\text{out}}(\Delta f_m) = \left(\frac{FKT}{2P_{\text{in}}}\left(1 + \frac{f_c}{\Delta f_m}\right)\right) \cdot \left(1 + \left(\frac{f_0}{2Q_L \cdot \Delta f_m}\right)^2\right) \tag{2}$$

Depending on the frequency offset, the main noise contribution are different, and they can be modelled in a very simple way as in Eq. (3), where K_α is a constant that depends on α, which can take

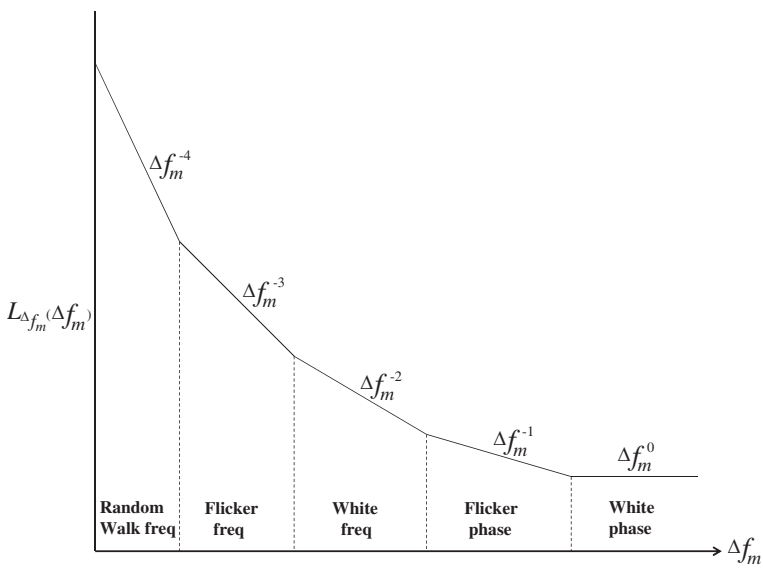

Figure 2. Dependence law of oscillator spectral densities.

values from 0 up 4. Fig. 2 shows the phase noise of the oscillator, and it points out the main noise contribution in each frequency region.

$$L_{\text{out}}\left(\Delta f_m\right) = \sum_{\alpha=0}^{N} \left(K_\alpha \cdot \Delta f_m{}^{-\alpha}\right) \tag{3}$$

Unfortunately, this model is only useful when a feed-back loop is recognised, it shows a great agreement between simulations and measurements [9, 20, 21]. On the other hand, reference plane oscillator are analysed using negative resistance, negative conductance or reflection coefficient [12, 13], and it is not possible to identify a feed-back loop to apply Leeson's model.

2. GENERAL CONSIDERATIONS ABOUT LEESON'S MODEL

Many authors [18–20] have taken Leeson's model as start point to model the noise as a transfer function of the input and output noise of the oscillator amplifier. This model is shown in Fig. 3. The input model of the phase noise is the one in Eq. (4), where the first term is the noise of the amplifier and the second one is the noise due flicker up-conversion.

$$L_{\text{in}}\left(\Delta f_m\right) = \left(\frac{FKT}{2 \cdot P_{\text{in}}}\left(1 + \frac{f_c}{\Delta f_m}\right)\right) \tag{4}$$

When Eq. (4) is considered as the input noise, the output phase noise is the multiplication of it with the passive transfer function as it is shown in Eq. (5). G_{cl} is the closed-loop gain as it is shown in Eq. (6), where DG is the amplifier Direct Gain between input and output; OLG is the Open Loop Gain; G_0 is the amplifier gain; and B is the loss of

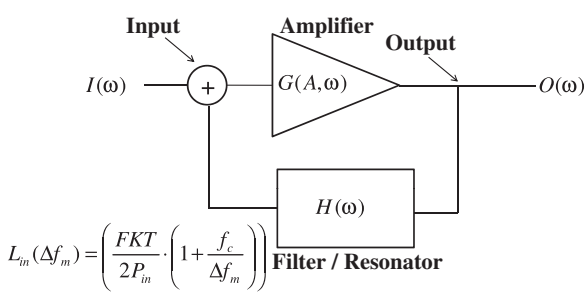

Figure 3. Oscillator phase noise Leeson classic model.

the resonator.

$$L_{\text{out}}\left(\Delta f_m\right) = L_{\text{in}}\left(\Delta f_m\right) \cdot \left|G_{cl}\right|^2 \tag{5}$$

$$G_{cl} = \frac{\text{DG}}{1-\text{OLG}} = \frac{G_0}{1 - \dfrac{G_0 \cdot B}{1 + j\dfrac{2 \cdot Q_L \cdot \Delta f_m}{f_0}}} \tag{6}$$

When Eq. (6) is applied to Eq. (5) the output phase noise is as it is defined by Eq. (7).

$$L_{\text{out}}\left(\Delta f_m\right) = \left(\frac{FKT}{2 \cdot P_{\text{in}}}\left(1 + \frac{f_c}{\Delta f_m}\right)\right) \cdot \left|\frac{G_0\left(1 + j\dfrac{2Q_L f_m}{f_0}\right)}{1 + j\dfrac{2Q_L f_m}{f_0} - G_0 B}\right|^2 \tag{7}$$

The Eq. (7) differs from the intensive tested and corroborated Leeson's expression (Eq. (2)). To obtain Leeson's expression it must be considered that $G_0 \cdot B = 1$ (oscillation condition) and also that $G_0 = 1$. The last condition is only true when the loaded quality factor of the oscillator is much lower than the unloaded one ($Q_L \ll Q_o$). As in a general case G_0 is determined by the insertion loss of the resonator

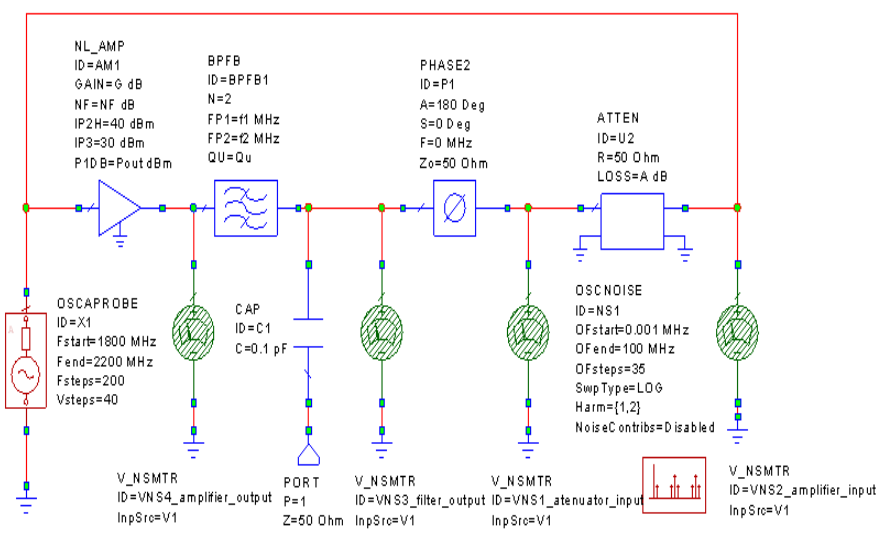

Figure 4. AWR schematic used for checking the phase noise using Leeson's/Everard's model.

$(1 - Q_L/Q_o) = B = {G_0}^{-1}$, so G_0 must be considered for phase noise calculation.

When G_0 is considered for input to output oscillation powers ($P_{\text{out}} = P\text{in} \cdot {G_0}^2$) the output phase noise is defined by Eq. (8).

$$L_{\text{out}}(\Delta f_m) = \frac{1}{\left(1 - \dfrac{Q_L}{Q_o}\right)^4} \cdot \left(\frac{FKT}{2 \cdot P_{\text{out}}}\left(1 + \frac{f_c}{\Delta f_m}\right)\right) \cdot \left(1 + \left(\frac{f_0}{2 \cdot Q_L \cdot \Delta f_m}\right)^2\right) \quad (8)$$

The expression on Eq. (8) is different from the one by Everard [22], which is is experimentally tested and corroborated, so it must be assumed that the Eq. (7) and the used model (3) are wrong for $G_0 \neq 1$. Besides, this equation has another big problem, if it was right, the phase noise will be function of the chosen measurement point inside the loop. The Direct Gain (G_0) is measured between signal input and output points, so it will be different for different input and output positions, but the Open Loop Gain (OLG = DG $\cdot$ $H(j\omega)$) will keep invariant.

It is possible to simulate an oscillator circuit, Fig. 4, and to measure the phase noise at different points of the loop. The simulation results in Fig. 5 show that the phase noise is the independent of the chosen point for the measurement. The authors propose the scheme in Fig. 6 in order to mend the disagreement between previous expressions, Eq. (7) and Eq. (8), and the simulated phase noise results.

If a signal is injected at any point of the loop, its phase noise will change. So, to measure the phase noise the input and output

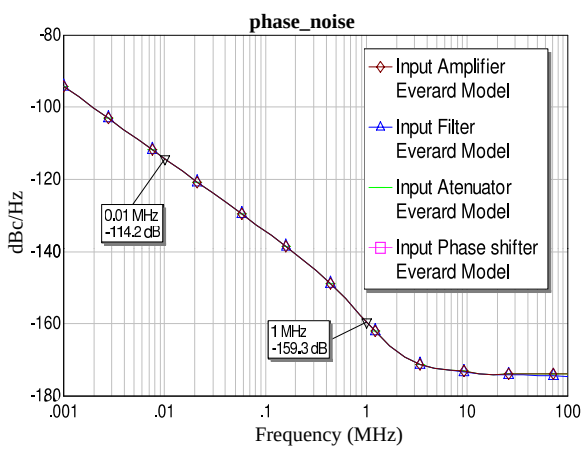

Figure 5. Simulated phase noise of the loop points of Fig. 4.

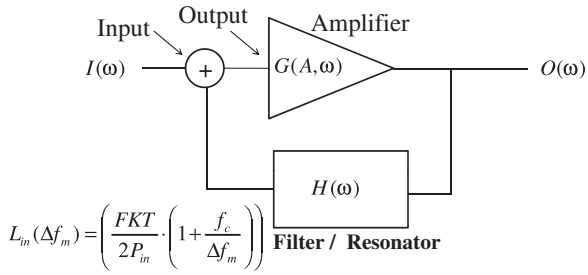

Figure 6. Proposed model.

must be the same point. Then the changes on the loop gain will affect numerator and denominator of the feed-back system function, so the phase noise result will be constant. In the Fig. 6, the chosen point is the amplifier input port, this way the DG is 1 and the OLG is Eq. (9). The values of DG and OLG will be the same ones whatever the chosen point to open the loop was.

$$\text{OLG} = \frac{1}{1 + j\dfrac{2 \cdot Q_L \cdot \Delta f_m}{f_0}} \tag{9}$$

When DG and Eq. (6) are substituted in Eq. (9) the Leeson's expression is obtained. Now it seems that it can be considered that the phase noise does not have any dependence with G_0, but it is not true. The F is strongly dependent of the amplifier gain, G_0, as it takes into account the large signal noise. The flicker noise up-conversion and the compression gain are factors that modifies the F factor, by making it greater.

3. CLASSIC OPTIMIZATION METHODS

There are only a few linear methods for phase noise optimization, and maybe the most commonly and widely used is the one by Everard [20–22]. Only if the oscillator is modelled as a feedback system, the Leeson's model [17] can be used to optimize the phase noise.

Substituting P_{in} with its equation as function of the amplifier gain (G_0) and the loaded and unloaded quality factors in Leeson's noise model equation, it gets Everard's condition for phase noise

optimization. With these substitutions it is obtained Eq. (10).

$$L_{\text{out}}(\Delta f_m) = \left(\frac{FKT}{2\cdot P_{\text{out}}\left(1-\dfrac{Q_L}{Q_0}\right)^2}\left(1+\frac{f_c}{\Delta f_m}\right)\right)\cdot\left(1+\left(\frac{f_0}{2\cdot Q_L\cdot\Delta f_m}\right)^2\right) \quad (10)$$

The Eq. (10) can be approximated for a white frequency noise region as Eq. (11).

$$L_{\text{out}}(\Delta f_m) \approx \frac{FKT}{8{Q_0}^2\cdot P_{\text{out}}\left(\dfrac{Q_L}{Q_0}\right)^2\left(1-\dfrac{Q_L}{Q_0}\right)}\cdot\left(\frac{f_0}{\Delta f_m}\right)^2 \quad (11)$$

When $Q_L = Q_0/2$ is achieved, Eq. (11) has a minimum, so the minimum phase noise is defined by Eq. (12).

$$L_{\text{out}}(\Delta f_m) = \frac{2FKT}{{Q_0}^2\cdot P_{\text{out}}}\left(\frac{f_0}{\Delta f_m}\right)^2 \quad (12)$$

The main conclusions that can be obtained from Everard's equation are:

- Noise factor (F) must be minimized, but to minimize the noise factor of the active device is very difficult because it is near to the lowest thanks to current manufacturing techniques [23].
- Flicker corner frequency must be the lowest to get a good phase noise feature for frequencies near to the carrier. To chose the most suitable transistor is a key to reduce the up-conversion of the flicker noise [24].
- Q_0 must be as big as it is possible to get the biggest Q_L.
- The output power of the amplifier (P_{out}) must be as big as it is possible. But now at days it is not always possible due to power consumption restriction on lots of applications as mobile ones.
- $\dfrac{Q_L}{Q_0} = \dfrac{1}{2}$, then the S_{21} of the resonator must be $-6\,\text{dB}$ for an optimum Q_L condition. In this case, the availability of accurate techniques for calculate the Q_L are really useful for the optimized design of oscillators [25].

These conditions and the proposed model, Fig. 6, are suitable when it is possible to define a feedback loop. It is easy to define a feedback loop when the oscillator is designed as a cascade set of "boxes" (amplifier, resonator, coupler for signal sampling, phase shifter, ...),

but, most of times, it is not designed on this way. The space limitation and the use of high frequencies techniques make difficult, or even impossible, to define a feedback loop as the feedback sometimes includes internal "elements" of the amplifier.

There are other works [18–22, 26], but none of them is a general method for linear optimization of phase noise. They are not suitable for optimization when the reference plane or reflection coefficient techniques are used and loop gain method cannot be used. In the next section, a new and general method is shown, which generalizes Everard's equation and is suitable for noise optimization, even if loop gain method cannot be used.

4. TRANSPOSE RETURN RELATIONS METHOD

There are two main groups of methods for oscillator analysis, they are loop gain method [9, 11] and reference plane methods [9, 27]. The main methods of the second group are negative resistance, negative conductance and reflection coefficient methods. These methods use a reference plane [13, 27] to divide the circuits into active and resonator sub-circuits, Fig. 7. It is not obvious to divide the oscillator into the resonator and active parts, as some times the resonator is not easily identified. There is a similar problem on the loop gain method, the feedback is not easily identified as sometimes the feedback includes the active device (really it includes some parasitics effects of the active device). All these makes really difficult to use the engineers preferred method, the loop gain method [9].

The use of reference methods has problems in some cases, but Jiménez-Martín et al. [14] and González-Posadas et al. [13] propose to verify an additional condition to assure that the plane reference methods provide right solutions. This additional condition is to apply the NDF to assure that the characteristic functions ($Z_T = Z_{\text{osc}} + Z_{\text{res}}$, $Y_T = Y_{\text{osc}} + Y_{\text{res}}$ or $\Gamma_T = 1 - \Gamma_{\text{res}} \cdot \Gamma_{\text{osc}}$) have only a pair of conjugates poles in the Right Half Plane (RHP). The NDF is applied to the active sub-circuit loaded with the proper load for each case. The suitable load is an open circuit for the Z_T, a short circuit for the Y_T and Z_0 for the Γ_T, Fig. 7. The validity of the reference plane methods can only be assured when the NDF analysis is satisfied.

Jiménez-Martín et al.'s method [14] is based on the Transpose Return Relation (RR_T) and Normalized Determinant Function (NDF). This method makes possible to represent and analyse any oscillator as a feedback system similar to the one on Fig. 3. Then Everard's method for phase noise optimization can be used for any oscillator topology.

On the other hand, the loop gain method [9, 11] (which is

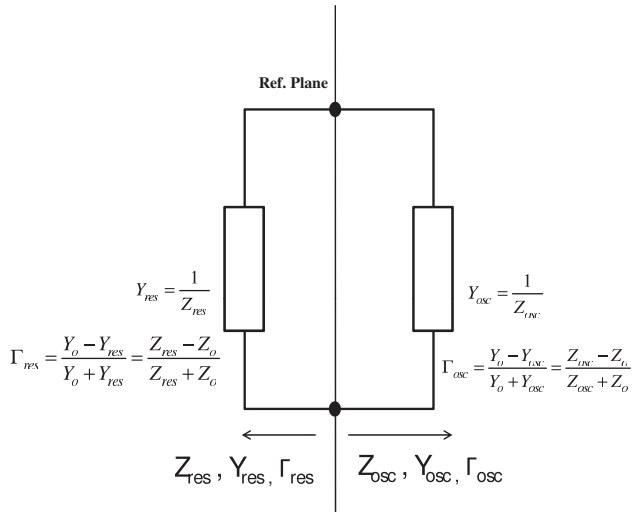

Figure 7. Schematic of oscillator divided by reference plane.

equivalent to use the RR_T Nyquist traces to analyze the circuit) allows to get some very useful parameters as gain margin, loaded quality factor (Q_L), which in fact is directly related to phase noise, and the possibility to assure the necessary and sufficient condition for a proper start-up of the oscillator. This condition is the existence of only a pair of conjugated complex poles in the RHP. This way, the Nyquist analysis of the open loop gain is correctly calculated and the poles of the network are located, but only way if the NDF of the open loop quadrupole of the oscillator with both ports loaded with Z_0 and some other additional conditions are verified [14]. The direct use of the NDF in designing stage is proposed. It is possible thanks to the NDF relation with the Return Relation, which makes this NDF method a powerful tool for rightful design of lay-out of oscillators.

The NDF is defined as the quotient of the determinant of the network and its normalised determinant, which can be obtained by "disabling" all active devices of the network, Eq. (13). An interesting property of the NDF is that it has an asymptote to +1, which is useful for determining the upper analysis frequency.

$$\text{NDF} = \frac{\Delta(s)}{\Delta_0(s)} \tag{13}$$

A most suitable way to calculate the NDF is to use of the Return Relations (RR) defined by Bode [15] as pointed by Platzer and Struble [16]. their NDF definition is in Eq. (14), where RR_i is he

return relation of the ith dependent generator when all the "previous" generators have been disabled.

$$\mathrm{NDF} = \prod_{i=1}^{n} (RR_i + 1) \tag{14}$$

Obviously, it is necessary to have the linear model of the transistor to use this method. If the linear model is not available, it can be extracted using any simulation software. Having the linear model, it is possible to have access to the "internal" ports of the dependent generator to use the Bode expressions to calculate RR.

The Transpose Return Relation (RR_T) is defined as the Return Relation (RR) with negative sign, Eq. (15). This way the RR_T represents a "True Open-loop Gain", Fig. 8, which is useful for Nyquist analysis.

$$\text{"True open} - \text{loop gain"} = RR_T = -RR = RR_{\mathrm{osc}} \cdot RR_{\mathrm{res}} = g_m \cdot H(\omega) \tag{15}$$

The use of RR_T expression as design tool makes possible to determine the number of poles of the network without any additional issue. The RR_T also provides the oscillation frequency (poles location) for Kurokawa's first harmonic approximation, it is when only the g_m is compressed. But the RR_T does not required the transistor g_m compression.

The RR_T is split into the active part, $RR_{\mathrm{osc}} = g_m$, which is only depended on linear transistor model; and the resonator part, $RR_{\mathrm{res}} = H(\omega)$, which does not only includes the resonator but it also includes all the parasitic elements. The proposed RR_T method is also suitable for calculate de the "true" loaded quality factor of the network, Eq. (16).

$$Q_L = -\frac{\omega}{2} \cdot \frac{d}{d\omega}\mathrm{Arg}(RR_T(\omega)) = -\frac{f}{2} \cdot \frac{d}{df}\mathrm{Arg}(RR_T(f)) \tag{16}$$

When the first harmonic approximation or descriptive function is applies to the RR_T, the minimum noise condition can be defined. This condition is when the AM-PM conversion is the lowest, it is when the cross of $-1/RR_{\mathrm{osc}}(V)$ and $RR_{\mathrm{res}}(\omega)$ is $\pi/2$ counter-clockwise for increasing values of V and ω, where V is the control variable. The control variable is always the control variable of the dependent generator when the RR_T is used. In a general case the Q can be increased making RR_{res} to change quickly with the frequency and considering RR_{osc} as frequency independent. But the RR_T is used, as RR_{osc} is exclusively the transistor transconductance, it is a constant value.

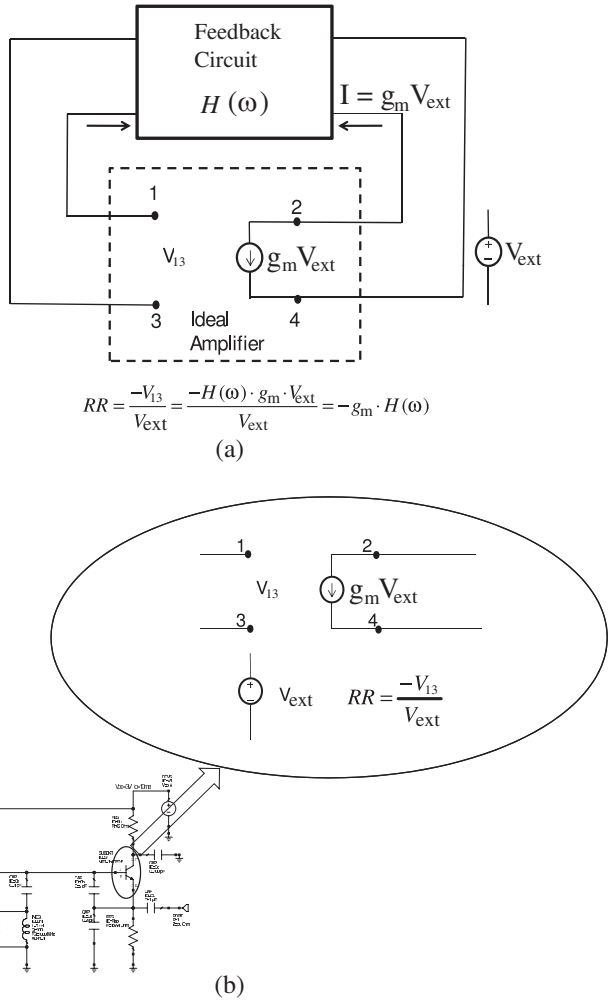

Figure 8. Schematic of oscillator for RR_T calculus.

5. PRACTICAL EXAMPLE

An oscillator, which is usually analyzed by reference plane methods, has been chosen as example. The oscillator example is a common collector [13] with a capacitive feed-back, Fig. 9. Even the simulations consider all parasitic and micro-strip elements, they have been omitted on the schematics for a better readability and comprehension. All the simulations that are presented in this paper have been performed using

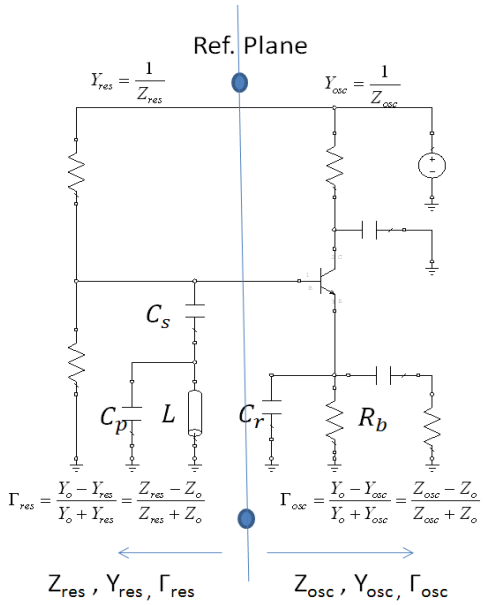

Figure 9. Schematic of common-base oscillator with reference plane.

AWR Microwave Office. The chosen transistor is a low cost, medium noise BJT, BFR380F from Siemens Technologies. It is important to remark that the feed-back includes the transistor and the use of microstrip elements (they only have two terminals instead of four) make impossible to redraw the circuit as a chain system of an amplifier and a resonator. All these characteristics cause that this classic oscillator is always analyzed by the impedance characteristic function (reference plane method). The use of this method makes the loaded Q not to be available, so neither the Leeson's noise model can be used for this oscillator, nor the gain margin can be estimated. Without these two parameters, gain margin and loaded Q, neither the phase noise nor the start-up time can be calculated.

With the traditional reference plane method, the result is the total impedance, Fig. 10. As pointed out, these impedance results cannot provide information about the loaded Q or the gain margin.

The circuit in Fig. 9 can be analyzed by the proposed RR_T method. The proposed method is defined in Fig. 8 and explained in deep detail by Jiménez-Martín et al. [14]. The obtained Nyquist plot from the RR_T analysis is in Fig. 11.

The RR_T Nyquist plot predicts pair of conjugated complex poles in the RHP, it is the necessary and sufficient condition for a proper

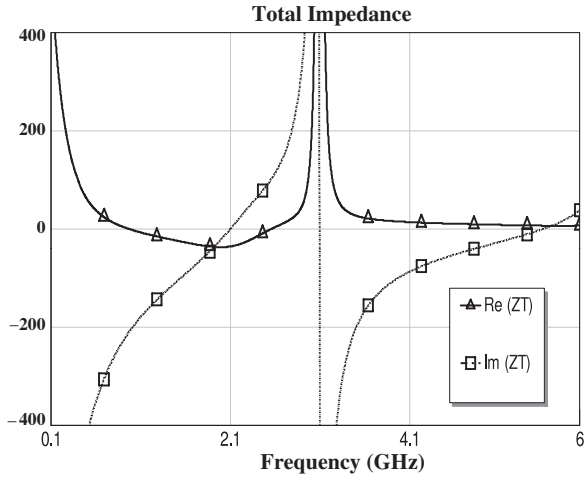

Figure 10. Impedance plots of the oscillator (without optimization).

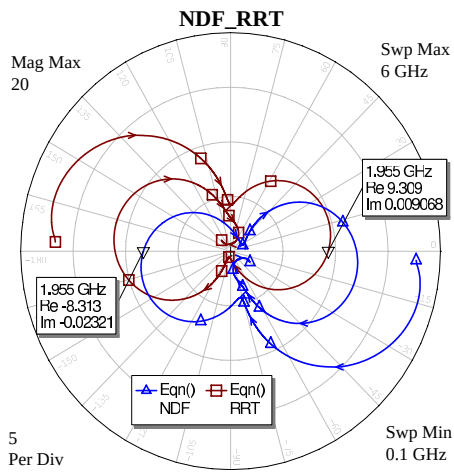

Figure 11. RR_T Nyquist plot (without optimization).

oscillation. These poles are at 1.955 GHz, it is next to the reference plane predicted oscillation frequency. An other advantage of the RR_T method over the reference plane ones is that the obtained frequency is the poles frequency and it is not required to compress the transistor to optain the poles frequency as it is required with the reference planes methods. This is true for the first harmonic approximation when only the g_m compression is considered. The main advantage of the RR_T

method for low noise oscillators design is that the loaded Q can be estimated and then the Leeson's equation [17], or any of the improved ones as the Everard's expression [20–22], can be used for phase noise optimization.

The non optimized loaded Q of the proposed example which has been estimated using the RR_T is in Fig. 12. The loaded Q at the oscillation frequency is 16.

The oscillator is simulated using the Harmonic Balance (HB) technique. This oscillator model, without being optimized, has been manufactured, Fig. 13. This unit has been measured using a HP E4446A spectrum analizer, the comparison of its spectrum with the HB simulated one is in Fig. 14, and the comparison of the phase noises is in Fig. 15. The HB simulated phase noise and the measured one have a good match. The difference at hight frequencies is due to the measurement equipment noise floor.

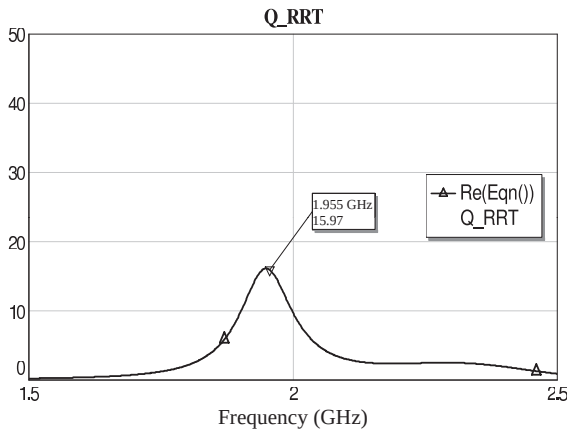

Figure 12. Estimated loaded Q using the RR_T (without optimization).

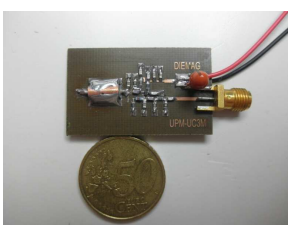

Figure 13. Oscillator picture.

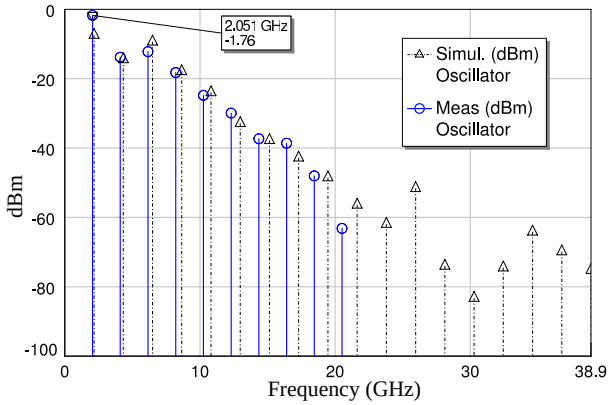

Figure 14. Simulated and measured spectra (without optimization).

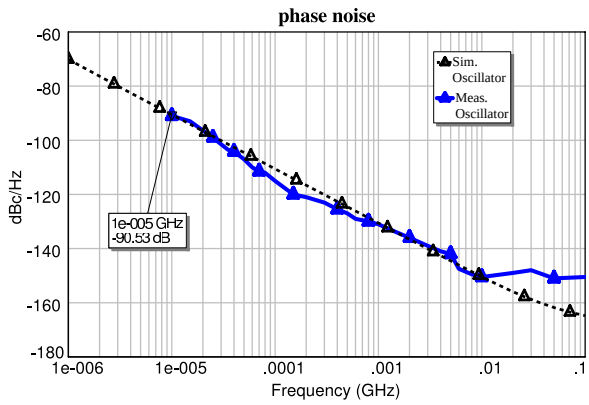

Figure 15. Simulated and measured phase noises (without optimization).

The Q_L can be calculated with Eq. (17) from the HB simulation of the phase noise, Fig. 15, where the f_Q is 0.07 GHz. The Q_L is similar to the one estimated by the NDF/RR_T method, which is shown in Fig. 12.

$$Q_L \approx \frac{f_0}{2 \cdot fQ} \approx \frac{2.003\,\text{GHz}}{2 \cdot 0.07\,\text{GHz}} \approx 14 \tag{17}$$

Considering the Q_L as a relevant factor of the phase noise, it is optimized and the obtained phase noise values are registered in Table 1. This table contains the lumped values of the oscillator, the loaded Q (Q_{RR_T}), the gain margin (GM) and the oscillation frequency ($f_{0\ RR_T}$)

that have been calculated using the RR_T method. It also contains the oscillation frequency ($f_{0\,\mathrm{HB}}$) and the phase noise at 10 KHz obtained by the HB simulation. The phase noise of the oscillator improves with the higher loaded Q, but when this factor goes above the optimum value the phase noise start to increase as it is predicted by Everard's expression.

The values of the 4th column are used for the new phase noise optimized oscillator. The Nyquist plot of the RR_T analysis of this new optimized oscillator is shown in Fig. 16 and the estimated RR_T loaded

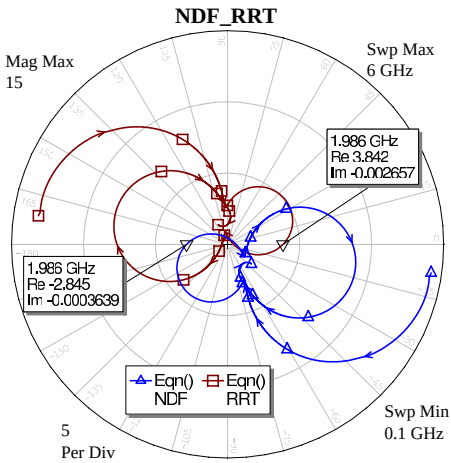

Figure 16. RR_T Nyquist plot (optimized oscillator).

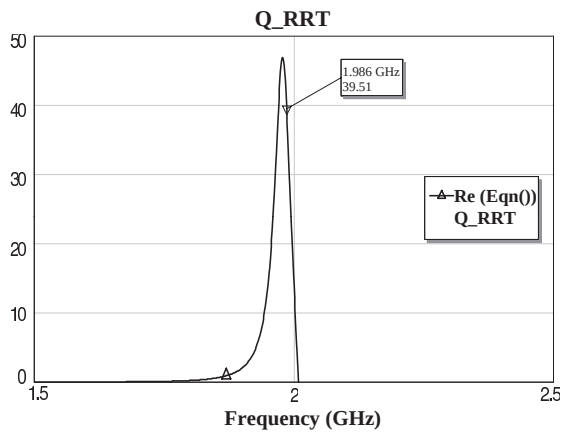

Figure 17. Estimated loaded Q using the RR_T (optimized oscillator).

Table 1. Oscillator phase noise vs. design lumped values.

Parameter	1	2	3	4	5	6
C_r (pF)	1.8	1.8	1.5	1.2	1.2	1.8
C_p (pF)	0.47	0.68	1	1.2	1.2	1.5
C_s (pF)	1.5	1.2	0.82	0.47	0.47	0.47
L (mm)	9	8.6	8.6	9	9	7.3
Q_{RR_T}	15.98	20.08	31.59	39.03	43.04	43.41
$f_{0\ RR_T}$ (GHz)	1955	2000	1996	1986	1982	1986
GM_{RR_T}	9.3	7.9	7.2	3.84	3.55	2.44
$f_{0\,\mathrm{HB}}$ (GHz)	2163	2145	2058	2003	1999	1999
$Ph.\ Noise_{\mathrm{HB}}$ (dBc/Hz @10 KHz)	−90.45	−93.38	−99.02	−106.5	−103.1	−101.6

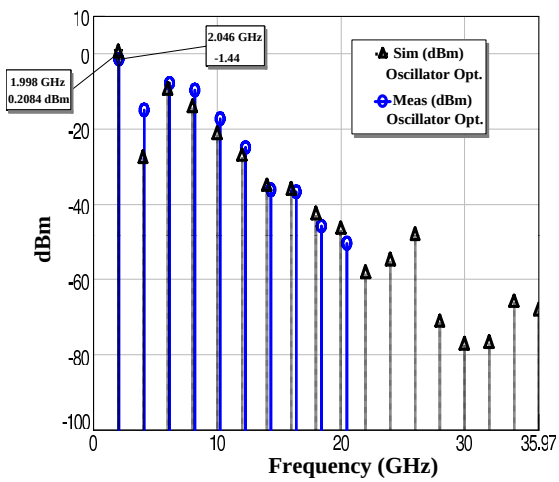

Figure 18. Simulated and measured spectra (optimized oscillator).

Q is shown in Fig. 17. The Q_L of the optimized oscillator is nearly 40, which is much larger than the one obtained from the oscillator without optimization (16).

The HB simulated phase noise at 10 KHz of the optimized oscillator is −106.7 dBc/Hz, which is much better than the one of the

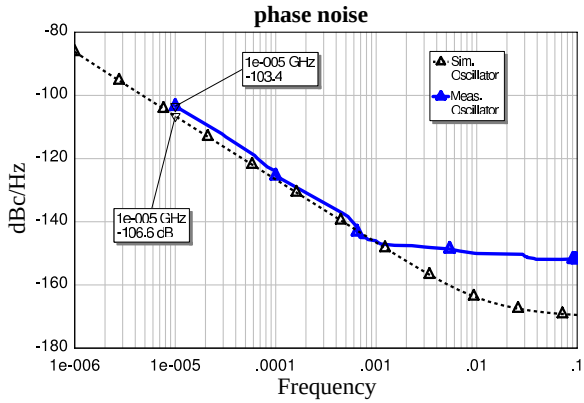

Figure 19. Simulated and measured phase noises (optimized oscillator).

non optimized oscillator, $-90.5\,\mathrm{dBc/Hz}$.

The optimized oscillator has been manufactured, it has an identical aspect as the one shown in Fig. 13, but with the optimized values from the 4th column of the Table 1. The simulated and measured output spectrum and phase noise are shown in Figs. 18 and 19. The simulated and measured data have a good match, and the slight differences are caused by the tolerances of the components. So, the oscillator can be considered as phase noise optimum, or at least it is very close to be (Phase noise $= -103.4\,\mathrm{dBc/Hz}$ @ $10\,\mathrm{KHz}$). As it has previously pointed, the noise floor for upper frequencies is due to the noise figure of the spectrum analyzer ($\approx -153\,\mathrm{dBc/Hz}$).

6. CONCLUSIONS

This paper is focused on a new method for designing oscillators, which allows to optimize the output phase noise. This method is suitable for topologies that have been, so far, analyzed using the reference plane methods. When these methods are used, it is very difficult, or even impossible, to optimize the phase noise. The proposed new method uses the RR_T expression, which allows to use the loop gain concept, and so to use the Leeson's equation for optimizing the output phase noise of the oscillator.

The phase noise is proportional to the inverse of the square of the loaded Q, when the resonator Q is high enough. But it is only valid, if the topology limit is not reached, as it was explained by Everard. This value limit together with the optimization possibility of the Q of the

network, whatever topology is used, make this RR_T method a powerful and interesting tool for optimizing and designing low noise oscillators. Besides, The RR_T is required to verify if the classic methods (reference plane or loop gain), so its use is required for any method.

In this way, the new RR_T linear method is a general method for phase noise optimization of any oscillator topology, and the good matching between simulated and experimental results has been proved with examples.

REFERENCES

1. Jiang, T., S. Qiao, Z.-G. Shi, L. Peng, J. Huangfu, W.-Z. Cui, W. Ma, and L.-X. Ran, "Simulation and experimental evaluation of the radar signal performance of chaotic signals generated from a microwave Colpitts oscillator," *Progress In Electromagnetics Research,* Vol. 90, 15–30, 2009, doi:10.2528/PIER08120104.
2. Fernandez Garcia, M., S. Ver Hoeye, C. Vazquez Antuna, G. R. Hotopan, R. Camblor Diaz, and F. Las-Heras, "Design and analysis of a multi-carrier Tx-Rx system based on rationally synchronized oscillators for localization applications," *Progress In Electromagnetics Research*, Vol. 120, 1–16, 2011, doi:10.2528/PIER11071504.
3. Shi, Z.-G., S. Qiao, K. S. Chen, W.-Z. Cui, W. Ma, T. Jiang, and L.-X. Ran, "Ambiguity functions of direct chaotic radar employing microwave chaotic Colpitts oscillator," *Progress In Electromagnetics Research*, Vol. 77, 1–14, 2007, doi:10.2528/PIER07072001.
4. Chen, D. and B. Sun, "Multi-wavelength fiber optical parametric oscillator based on a highly nonlinear fiber and a Sagnac loop filter," *Progress In Electromagnetics Research*, Vol. 106, 163–176, 2010, doi:10.2528/PIER10061506.
5. Robins, W. P., *Phase Noise in Signal Sources (Theory and Applications)*, IEE Telecommunications Series 9, Peter Peregrinus Ltd., London, UK, 1982, ISBN-13: 978-0863410260.
6. Richardson, A., *WCDMA Design Handbook*, Cambridge University Press, 2005, ISBN-13: 978-0521187824.
7. Barton, D. K., *Radar System Analysis and Modeling*, Artech House, Boston, 2005, ISBN-13: 978-1580536813.
8. Kurokawa, K. K., "Some basic characteristics of broadband negative resistance oscillator circuits," *Bell Systm. Tech. J.*, Vol. 48, No. 6, 1937–1955, 1969.

9. Rhea, R. W., *Discrete Oscillator Design: Linear, Nonlinear, Transient, and Noise Domains*, Artech House Publishers, New York, 2010, ISBN-13: 978-1608070473.
10. Fernandez Garcia, M., S. Ver Hoeye, C. Vazquez Antuna, G. R. Hotopan, R. Camblor Diaz, and F. Las-Heras, "Optimization of the synchronization bandwidth of rationally synchronized oscillators based on bifurcation control," *Progress In Electromagnetics Research*, Vol. 119, 299–313, 2011, doi:10.2528/PIER11062007.
11. Randall, M. and M. J. Hock, "General oscillator characterization using linear open-loop S-parameters," *IEEE Transactions on Microwave Theory and Techniques*, Vol. 49, No. 6, 1094–1100, 2001, doi:10.1109/22.925496.
12. Jackson, R. W., "Criteria for the onset of oscillation in microwave circuits," *IEEE Transactions on Microwave Theory and Techniques*, Vol. 40, No. 3, 566–569, 1992, doi:10.1109/22.121734.
13. Gonzalez-Posadas, V., J. L. Jimenez-Martin, A. Parra-Cerrada, D. Segovia-Vargas, and L. E. Garcia-Munoz, "Oscillator accurate linear analysis and design. Classic linear methods review and comments," *Progress In Electromagnetics Research*, Vol. 118, 89–116, 2011, doi:10.2528/PIER11041403.
14. Jimenez-Martin, J. L., V. Gonzalez-Posadas, A. Parra-Cerrada, D. Segovia-Vargas, L. E. Garcia-Munoz, "Provisos for classic linear oscillator design methods. New linear oscillator design based on the NDF/RRT," *Progress In Electromagnetics Research*, Vol. 126, 17–48, 2012, jpier:vol126/02.11112308.
15. Bode, H. W., *Network Analysis and Feedback Amplifier Design*, ASIN: B003UT90Z4, Van Nostrand Co. Inc., New York, 1945.
16. Platzker, A. and W. Struble, "Rigorous determination of the stability of linear N-node circuits from network determinants and the appropriate role of the stability factor K of their reduced two-ports," *Int. Integr. Nonlinear Microw. Millimeter wave Circuits Workshop*, 93–107, 1994, doi:10.1109/INMMC.1994.512515.
17. Leeson, D. B., "A simple model of feedback oscillator noise spectrum," *Proceeding of the IEEE*, 329–330, 1966, doi:10.1109/PROC.1966.4682.
18. Hajimiri, A. and T. Lee, "A general theory of phase noise in electrical oscillators," *IEEE J. Solid-State Circuits*, Vol. 33, No. 2, 179–194, Feb. 1998, doi:10.1109/4.658619.
19. Demir, A., A. Mehrotra, and J. Roychowdhury, "Phase noise in oscillators: A unifying theory and numerical methods for characterization," I*EEE Trans. Circuits Syst. I, Fundam. Theory*

Appl., Vol. 47, No. 5, 655–674, May 2000, doi:10.1109/81.847872.

20. Everard, J. K. A. and J. Bitterling, "Low phase noise highly power efficient oscillators," *IEEE International Frequency Control Symposium*, Orlando, USA, May 27–30, 1997, doi:10.1109/FREQ.1997.639209.
21. Everard, J., *Fundamentals of RF Circuit Design with Low Noise Oscillators*, Wiley, Dec. 2000, reprinted Oct. 2002, ISBN-13: 978-0471497936.
22. Everard, J. K. A., "A review of low noise oscillator. Theory and design," *Proceedings of the 1997 IEEE International on Frequency Control Symposium*, 909–918, 1997, doi:10.1109/FREQ.1997.639208.
23. Asadi, S. and M. C. E. Yagoub, "Efficient time-domain noise modeling approach for millimeter-wave fets," *Progress In Electromagnetics Research*, Vol. 107, 129–146, 2010, doi:10.2528/PIER10042012.
24. Guo, B. and G. Wen, "Periodic time-varying noise in current-commutating cmos mixers," *Progress In Electromagnetics Research*, Vol. 117, 283–298, 2011, doi:10.2528/PIER11040706.
25. Wang, R., J. Xu, C. L. Wei, M.-Y. Wang, and X.-C. Zhang, "Improved extraction of coupling matrix and unloaded Q from S-parameters of lossy resonator filters," *Progress In Electromagnetics Research*, Vol. 120, 67–81, 2011, doi:10.2528/PIER11072804.
26. Rohde, U. L., C. R. Chang, J. W. Gerber, "Design and optimization of low-noise oscillators using nonlinear CAD tools," *IEEE Frequency Control Symp. Proc.*, 548554, 1994, doi:10.1109/FREQ.1994.398283.
27. Esdale, D. J. and M. J. Howes, "A reflection coefficient approach to the design of one port negative impedance oscillators," *IEEE Transactions on Microwave Theory and Techniques*, Vol. 29, No. 8, 770–776, 1981, doi:10.1109/TMTT.1981.1130445.